Tourist Development

1. Discussion of the Santa Rosa County Tourist Development Council Board of Directors / Stakeholder / Staff Strategic Plan Facilitation Request For Qualifications.

2. Discussion of the BP Supplemental Promotional Fund Grant Agreement for $73, 600 to help continue efforts to promote the 2016 spring tourism season.

Economic Development 1

HISTORIC MILTON Navarre Beach

FLORIDA'S PLAYGROUND

To: Santa Rosa County Board of County Commissioners

From: Julie Morgan, Tourist Development Director

Subject: Santa Rosa County Tourist Development Council Board of Directors Request For Qualifications Strategic Plan Facilitation

Date: January 20, 2016

Recommendation

Discussion of the Santa Rosa County Tourist Development Council Board of Directors / Stakeholder / Staff Strategic Plan Facilitation Request For Qualifications.

Background

On November 5, 2015 the Santa Rosa County Tourist Development Council Board of Directors voted unanimously to recommend an RFQ for hiring a firm to facilitate the Tourist Development Council's session meeting and to produce an outcome report.

Purpose

The purpose of the Strategic Plan development is to align goals of the TDC while working towards desired outcome of increasing tourism bed tax dollars in Santa Rosa County.

Santa Rosa County Tourist Development Council
8543 Navarre Parkway – Navarre, FL 32566
phone: 850.939.9666 – fax: 850.939.0865
web: floridasplayground.com

Economic Development 2

HISTORIC MILTON Navarre Beach

FLORIDA'S PLAYGROUND

To: Santa Rosa County Board of County Commissioners

From: Julie Morgan, Tourist Development Director

Subject: BP Supplemental Promotional Fund Grant Agreement

Date: February 1, 2016

Recommendation

Discussion of the BP Supplemental Promotional Fund Grant Agreement for $73, 600 to help continue efforts to promote our 2016 spring season. Davis, South, Barnette & Patrick our advertising agency will utilize the funds for a broadcast/cable media buy.

Background

Six years ago (2010) Navarre Beach and Santa Rosa County were facing one of the worst disasters on the coast: the BP oil spill. Within a few months of the spill, BP Grant funds were made available to help offset the negative economic impact of the oil spill. Our relationship with BP has helped Santa Rosa County become one of the fastest growing counties in the Florida Panhandle. The Santa Rosa County Tourist Development Office was selected for additional BP funding in the amount of $73,600. The funds have to be utilized and expended by July 31, 2016. The Easter holiday comes very early this year, thus our spring shoulder season will be several weeks longer than normal. Our advertising agency will launch a TV media spend for spring break to promote in the March/April 2016.

DSB&P will run advertising in the following target markets:

- Birmingham, AL
- Atlanta/Columbus, GA
- Nashville, TN
- Little Rock, AR
- Baton Rouge, LA

Santa Rosa County Tourist Development Council
8543 Navarre Parkway – Navarre, FL 32566
phone: 850.939.8666 – fax: 850.939.0085
web: floridaplayground.com

HISTORIC MILTON Navarre Beach

FLORIDA'S PLAYGROUND

Request For Qualifications

Board of Directors / Stakeholder / Staff
Strategic Plan Facilitation

The Santa Rosa County Tourist Development Council Board of Directors is seeking qualifications from qualified consultants to facilitate discussions and prepare a five year strategic plan for the organization. This plan is expected to include goals and measurable objectives, as well as activities to accomplish the goals.

Company Background

The Santa Rosa County Tourist Development Council, per Florida Statute, is a nine member volunteer advisory group made up of representatives from Santa Rosa's tourism and hospitality industry. The members are appointed by the Santa Rosa County Commission for a term of four years. The TDC makes recommendations to the commission on marketing, management, capital investment and distribution of the tourist development tax.

Tourist Development Council Board members must derive a portion of their income, or be employed in a business that deals directly with tourists, have an extensive knowledge of or background in the marketing and/or sales of tourism goods or services. Examples of such businesses would include lodging, attractions, restaurants, museums, hospitality education and other businesses, which cater to tourists.

Santa Rosa County generally has three public tourist related meetings a month - a South End Committee, a North End Committee, and a TDC Board. Formal recommendations are made at the board meeting. The TDC adheres to Florida's sunshine and public records laws.

The Santa Rosa County Tourist Development Office is responsible for promoting tourism throughout Santa Rosa County. The TDO directs tourism marketing efforts to grow tourism revenue and contribute to the long-term health of our county's economy, while striving to improve the quality of life for our residents. The TDO is also responsible for staffing the Navarre Visitor Information Center and coordinating the efforts of the Santa Rosa Tourist Development Council, an advisory board to the Santa Rosa County Board of County Commissioners. The TDO falls under the Santa Rosa County Economic Development Office and the Board of County Commissioners.

The Tourist Development Office is funded through bed taxes, or the lodging tax paid by visitors staying in Santa Rosa County. As it applies exclusively to rental of living quarters or accommodations for a term of six months or less, it has been nicknamed the "bed tax." Bed taxes can be used only for activities that promote the county.

Scope of work:

- Facilitate two focus group sessions to serve as a forum for stakeholders, board members and key staff participants to engage in meaningful conversations about current state of the hospitality industry, board governance objectives, board/staff relations and other topics related to organizational development. One session for North End Committee and one session for South End Committee
- Facilitate a board workshop/planning session with Santa Rosa County Tourist Development Council Board of Directors and Tourist Development Office Staff
- Conduct any necessary follow-up meetings with these groups
- Meet with Chairman and Tourist Development Director to review plan and progress
- Develop quantitative objectives necessary to measuring performance against the goals of the plan.
- Provide a final report and presentation to the Santa Rosa County Tourist Development Council, Santa Rosa County Board of County Commissioners and Tourist Development Office

Proposal to include:

- Consultant firm/individual background and experience
- Experience with strategic planning and board facilitation, especially government affiliation
- Experience with destination marketing organizations or visitor industry related business
- Reference list of previous similar projects
- Sample agenda/proposed format
- Outline of work proposed, including a timeline of preparation, execution and final report
- Fee structure for completing the plan with an estimate of additional out-of-pocked expenses. Include estimates of the number of onsite visits and any other costs associated with the planning process

Selection Criteria

Proposals received in response to this RFQ will be objectively reviewed by the Santa Rosa County Tourist Development Council Board of Directors, the Santa Rosa County Board of County Commissioners, and Tourist Development Director. Selections will be based on the following criteria:

- Proposer's ability to perform the scope of work based upon qualifications and prior experience with similar projects
- References provided by individuals involved in past projects
- The Proposer's demonstrated ability to complete the project on schedule
- Competitiveness of fees

The Santa Rosa County Tourist Development Board of Directors and the Santa Rosa County Board of County Commissioners reserves the right to negotiate and reject any/all of submissions if necessary.

Proposal to be received no later than XXXXX at XXXXX Central Standard Time. Send by email or mail to:

Julie Morgan
Tourist Development Director
Santa Rosa County Tourist Development Office
8543 Navarre Parkway
Navarre, FL 32566
Work: 850-981-8900
Cell: 850-572-0206
Julie@santarosa.fl.gov

All questions regarding this RFQ may be addressed to Julie Morgan at 850-572-0206 or Julie@santarosa.fl.gov. Additional information about Santa Rosa County Tourist Development Council can be found on our Web Site at http://www.santarosa.fl.gov/TDO and our brand Florida's Playground can be found on our marketing Web site at http://www.floridasplayground.com

August 10, 2015

Deepwater Horizon Claims Center
Attn: Nick Gagliano
935 Gravier Street, Ste 1905
New Orleans, LA 70112

Mr. Gagliano,

The Santa Rosa County Tourist Development Organization has worked with BP to secure funding for advertising since the Deepwater Horizon Incident. Through the previous BP grants, we have increased advertising in our key feeder markets and reached out to new/emerging markets. We have also developed the new Florida's Playground Trial that has allowed us to market twelve different attractions only found in Santa Rosa County. The bottom line: all of these efforts have allowed Santa Rosa County to become one of the fast growing counties in the Florida Panhandle.

The TDO and DSB&P are proud of everything we have accomplished in our partnership with BP and hope that our relationship will continue to grow. We are very excited that Santa Rosa County has been selected to submit a proposal for a third round of funding of $73,600 to help us continue our efforts. We would like to request to utilize these funds for a broadcast/cable media buy to promote our 2016 spring season. As you know, Easter is very early this year, which means our spring shoulder season will be several weeks longer than normal. We would like to use these funds for advertising in March/April 2016 to promote the events and offerings within the county during that shoulder season.

We would run the advertising in the following target markets:

- Birmingham
- Atlanta/Columbus
- Nashville
- Little Rock
- Baton Rouge

We would use the same video from the TV spots produced last year, but change the script and voice over to be more relevant to what is happening during the spring season.

Budget:

TV Media Spend:	$73,000.00
Audio Revisions:	$600.00

We look forward to working with you and your team.

Regards,

Meridith South
Davis South Barnette & Patrick
251.402.0062

Julie Morgan
Santa Rosa TDO
850.981.8900

To: Julie Morgan, County of Santa Rosa (Santa Rosa County Tourist Development Council)
From: Nick Gagliano, Grant Coordinator
Date: 1-12-16
RE: Promotional Fund

Attached is the contract for the distribution of the Supplemental Gulf Tourism and Seafood Promotional Fund Grant.

Please note the following pages:

1. Page 7 – Please sign and print name
2. Page 3 – Reporting Updates should be sent to the Claims Administration Office on Oct. 1, 2015; Jan. 1, 2016; April 1, 2016 and then the final report.
3. Page 2 – Grant Award and distribution
4. Page 9 – Schedule of Deliverables

Please send the signed contact to:
Deepwater Horizon Claims Center
Attn: Nick Gagliano
935 Gravier Street, Suite 1905
New Orleans, LA 70112

If you would like a signed copy returned, please let me know and I will be happy to send one to you. If you would like an original signed copy, please make a copy of this contract and send both copies to us.

Should you have any question, please feel free to let me know. You can contact me at ngagliano@dheclaims.com.

I look forward to working with you.

Nick Gagliano

SUPPLEMENTAL PROMOTIONAL FUND GRANT AGREEMENT

This Supplemental Promotional Fund Grant Agreement (this "Agreement") is entered into by _____ _____ ("Grantee"), whose mailing address is _____ _____; and Patrick Juneau, as Trustee (the "Trustee") of the Settlement Trust as further defined below (the "Settlement Trust"), and as Claims Administrator of the Court Supervised Settlement Program (the "Claims Administrator").

RECITALS

WHEREAS, BP Exploration & Production Inc., a Delaware corporation and certain of its affiliates (collectively "BP") have been named as defendants in *In re Oil Spill by the Oil Rig "Deepwater Horizon" in the Gulf of Mexico, on April 20, 2010*, MDL No. 2179 (the "MDL Litigation");

WHEREAS, BP and the Economic Class Representatives, individually and on behalf of the Economic and Property Damages Settlement Class, by and through Lead Class Counsel entered into an Economic and Property Damages Settlement Agreement ("Settlement Agreement") dated April 18, 2012, and amended May 1, 2012, for the purpose of settling all Released Claims against the Released Parties, including BP;

WHEREAS, the United States District Court of the Eastern District of Louisiana (the "Court") has approved the Settlement Agreement by Order dated December 21, 2012 (the "Final Approval Order," as further defined below);

WHEREAS, on May 4, 2012, BP, Lead Class Counsel, the Trustee and J.P. Morgan Trust Company (the "Directed Trustee") entered into the *Deepwater Horizon* Economic and Property Damages Trust Agreement (the "Trust Agreement") creating the Settlement Trust;

WHEREAS, the Settlement Trust is intended to meet the requirements of a qualified settlement fund within the meaning of section 468B of the Internal Revenue Code of 1986, as amended from time to time, and section 1.468B-1(c) of the Treasury Regulations promulgated thereunder;

WHEREAS, the Settlement Trust's purpose is to establish a mechanism to pay Settlement Payments (as defined in the Settlement Agreement) and the costs of administering the Settlement Program (as defined in the Settlement Agreement) in accordance with the terms of the Settlement Agreement and the Trust Agreement.

WHEREAS, the Trustee has the power, pursuant and subject to the terms of the Settlement Agreement and the Trust Agreement, to make distributions from the funds held by the Settlement Trust subject to the terms and conditions thereof; and

WHEREAS, Grantee has previously obtained funds for promotional services through one or more prior promotional fund grant agreements, and now desires to obtain additional funds for promotional services as described on attached Schedule "1";

NOW, THEREFORE, for good and valuable consideration, the receipt and sufficiency of which are hereby acknowledged, the Parties agree to the terms and conditions set forth herein.

AGREEMENT

1. Definitions.

The following words and phrases have the meanings indicated. Other words and phrases appearing in capital letters throughout this Agreement shall have the meanings they are given with their first operative use. Terms not otherwise defined herein shall have the same meanings ascribed to them in the Settlement Agreement and/or the Trust Agreement.

1.1 Applicable Law: means all applicable local, state and federal laws, rules and regulations.

1.2 Claims Administrator: has the meaning ascribed to it in the Settlement Agreement.

1.3 Individual: means a natural person.

1.4 Lead Class Counsel: means the lawyers appointed by the Court to represent the Class of Claimants.

1.5 Settlement Trust: means the qualified settlement trust fund established pursuant to that certain *Deepwater Horizon* Economic and Property Damages Trust Agreement, dated May 4, 2012, among BP, Lead Class Counsel, the Claims Administrator, and the Directed Trustee.

1.6 Parties: means the Settlement Trust, the Claims Administrator and Grantee.

1.7 Final Approval Order: means the Order entered by the Court on December 21, 2012 granting final approval of the Settlement Agreement.

2. Scope of Services.

2.1 Services. The general scope of the services to be furnished by Grantee shall be those described on attached Schedule "1".

2.2 The Services shall be provided in strict accordance with the terms of the Settlement Agreement, the Final Approval Order, and in compliance with Applicable Law.

3. Grant Award.

3.1 Amount of Grant. Subject to the terms and conditions of this Agreement, and contingent upon sufficient funding of the Settlement Trust by BP, the Settlement Trust agrees to award to Grantee up to $73,600.00 for the period August 1, 2015 to July 31, 2016. The Grant shall be payable as follows:

$36,800.00, (which is 50% of this supplemental Grant), after signing of this Agreement.

$36,800.00, (which 50% of this supplemental Grant), upon on receipt and approval of the final report and submission of all of the deliverables as outlined in Schedule 1.

3.2 Documentation. Grantee shall submit to the Claims Administrator all documentation as further described in Paragraph 3.3 within ten (10) days before the beginning of each calendar quarter, commencing with the quarter starting October 1, 2015, or more frequently as the Claims Administrator may require. The Claims Administrator shall review Grantee's documentation and if acceptable, authorize the next Grant payment. In the event that any documentation is deemed not acceptable by the Claims Administrator, Grantee shall be notified in writing of such deficiencies within ten (10) days of submission of the documentation.

3.3 Reporting. Grantee will provide reports to the Claims Administrator at least quarterly, within ten (10) days before the beginning of each calendar quarter, commencing with the quarter starting October 1, 2015, or more often as the Claims Administrator may require, in which it will report, for the preceding quarter the following: an updated list of services and deliverables as outlined on Schedule 1. The Claims Administrator may distribute such reports as it deems appropriate. In addition, Grantee may be required to provide additional reports as may further be defined by the Claims Administrator in writing.

3.4 Ownership of Documentation. All records, reports, documents and other material delivered or transmitted to Grantee by the Claims Administrator shall remain the property of the Claims Administrator, and shall be returned by Grantee to the Claims Administrator, at Grantee's expense, at termination or expiration of this Agreement. All records, reports, documents, or other material related to this Agreement and/or obtained or prepared by Grantee in connection with the performance of the Services contracted for herein shall become the property of the Claims Administrator, and shall, upon request, be returned by Grantee to the Claims Administrator, at Grantee's expense, at termination or expiration of this Agreement.

3.5 Audit Rights. Grantee will provide to the Claims Administrator copies of its audit reports, if and when requested to do so by the Claims Administrator. In addition, the Claims Administrator or its authorized representatives may, at any time on reasonable notice, audit the operation of Grantee in relation to the activities undertaken pursuant to this Agreement.

3.6 Payment in Full. The Grant payments made hereunder are and shall be deemed to constitute "payment in full" for any Services performed by Grantee.

4. Term.

4.1 This Agreement is effective as of 12:01 a.m. Eastern Standard Time on August 1, 2015 (the "Effective Date") and its term shall end on July 31, 2016 (the "Expiration Date"), unless terminated on a different date in accordance with Paragraph 4.2 or as otherwise agreed by the Parties.

4.2 Grantee shall be authorized to perform the Services as further defined in Schedule "1" to this Agreement starting on the Effective Date, through and including the earlier of: (1) the date that the Court enters an Order closing the proposed Court Supervised Settlement Program; (2) the effective date of any termination of Grantee by the Claims Administrator for "cause"; (3) the date that the Grantee is terminated by the Claims Administrator with at least thirty (30) days written notice before the end of any quarter, which the Claims Administrator shall have the right to do with or without cause or (4) the Expiration Date (collectively, "Termination Events"). As used herein, "cause" shall include, without limitation, the following: (i) the failure of Grantee to perform the Services in accordance with the requirements of this Agreement, (ii) the breach by Grantee of any other obligations under this Agreement, which breach is not cured within ten (10) days of written notice thereof, (iii) the commission of any act or any omission involving gross negligence, fraud, or other intentional or willful misconduct by Grantee, and (iv) any other violation of a statute, regulation, order, decree or court requirement or other Applicable Law by Grantee.

5. [Intentionally Omitted]

6. Representations and Warranties.

Grantee represents, warrants and covenants that: (i) it has the power and authority to enter into this Agreement and to perform all of its obligations hereunder; (ii) the execution, delivery and performance of this Agreement does not violate or conflict with any other agreement to which Grantee is a party or by which it is bound; (iii) Grantee has not previously entered into any agreement that would restrict Grantee in the performance of the Services; (iv) Grantee shall comply with all Applicable Law in performing its obligations under this Agreement; (v) Grantee shall use commercially reasonable efforts to verify that each of its employees performing Services is legally entitled to work in the United States and has all necessary visas and work permits; (vi) Grantee has the capacity and resources to perform the Services; (vii) all Services shall be performed by qualified personnel in a timely, professional and workmanlike manner in accordance with generally accepted industry practices; (viii) Grantee is either a governmental entity political subdivision of a governmental entity, or is recognized by the Internal Revenue Service (the "IRS") as a public charitable organization under sections 501(c)(3) and 509(a)(1), (2) or (3) of the Internal Revenue Code, and will inform the Claims Administrator immediately of any changes in, or IRS proposed or actual revocation (whether or not appealed) of such tax status; and (ix) all Grant funds shall be used only for the purposes described herein.

7. [Intentionally Omitted]

8. [Intentionally Omitted]

9. Miscellaneous.

9.1 Subcontracting. Notwithstanding any provision in this Agreement to the contrary, Grantee shall not subcontract any of its obligations under this Agreement to any third party unless approved in writing by the Claims Administrator.

9.2 Successors and Assigns. The terms and conditions of this Agreement shall be binding upon the Parties and inure to the benefit of the Parties and their respective successors and permitted assigns; provided, however, that, unless otherwise provided in this Agreement, the obligations of the Parties under this Agreement may not be delegated

nor shall any rights be assigned or transferred, including by merger, reorganization, change of control, acquisition or sale of all or substantially all of its assets or business or otherwise (including, without limitation, by operation of law) (collectively a "Sale Transaction"), by a Party without the other Parties' prior written consent.

9.3 Compliance with Laws. Grantee and its respective employees and agents shall comply with all Applicable Law in performance under this Agreement.

9.4 Tax Responsibility. Grantee shall be responsible for the payment of any taxes that might be due from or assessed on any of the Grant funds received under this Agreement.

9.5 Maintenance of Books and Records. In order to implement and effectuate the audit rights of the Claims Administrator as described in Paragraph 3.5, Grantee shall maintain its books and records and other documents pertaining to the use and disposition of the grant funds received and to the Services rendered under this Agreement, for a period of at least three (3) years after the Termination Date.

9.6 Dispute Resolution. Any and all claims, disputes and controversies arising under or relating to this Agreement that cannot be resolved by the Parties shall be determined solely in the Court, under Louisiana law without regard to its conflicts of law provisions. All Parties waive the right to a jury trial. In the Court's discretion, the prevailing Party in any dispute arising from this Agreement may be awarded reasonable attorney's fees.

9.7 Complete Agreement. This Agreement and any exhibits, together with any addenda, set forth the entire agreement of the Parties with respect to Services hereunder, and any prior or contemporaneous promotional fund grant agreements, promises, conditions or understandings are superseded and/or replaced with this Agreement.

9.8 Modification. No provision of this Agreement may be changed unless the change is set forth in a written amendment to this Agreement signed by the Parties.

9.9 No Waiver. If a Party waives compliance with any term or condition of this Agreement, it shall be not deemed a waiver of any other right, nor to permit less than strict compliance with any term or condition on any future occasion.

9.10 Governing Law: Severability. This Agreement shall be governed by and construed in accordance with the law of the State of Louisiana without reference to its conflict of laws principles. To the extent that any provision is found to be unenforceable or invalid, then such provision shall be ineffective only to the extent of such unenforceability or invalidity, and shall not affect the enforceability or validity of any other provision of this Agreement.

9.11 Notices. All notices and correspondence required to be given by this Agreement shall be delivered by hand or certified mail, return receipt requested and postage pre-paid, or by a nationally recognized courier service, or by facsimile transmission, and be addressed as follows:

If to Claims Administrator and/or Settlement Trust:

Patrick Juneau
935 Gravier St.
Suite 1905
New Orleans, LA 70112
Phone: 504-934-4920
Fax: 504-934-4998
Email: mjj@dheclaims.com

If to Grantee:

_____
_____
_____
Phone:
Fax:
Email:

9.12 Counterparts. This Agreement may be executed in one or more counterparts which taken together shall constitute one single agreement between the Parties.

9.13 Independent Contractors. Grantee is an independent contractor. No Party to this Agreement is an agent, representative, joint venturer, or partner of any other Party. No Party shall have any right, power or authority to enter into any agreement for or on behalf of, or incur any obligation or liability of, or to otherwise bind, any other Party. Each Party shall bear its own costs and expenses in performing the Agreement. Grantee shall be responsible for the payment of all fees, wages and/or salaries payable to Grantee personnel and for providing Grantee personnel with any fringe benefits to which they are entitled by reason of being an employee or contractor of Grantee. Grantee shall comply, at its expense, with all applicable provisions of workers' compensation laws, unemployment compensation laws, federal social security law, the Fair Labor Standards Act and all other applicable federal, state and local laws and regulations relating to terms and conditions of employment required to be fulfilled by employers. Grantee shall comply with all applicable occupational health and safety laws, standards and requirements pertaining to the Services, including, but not limited to, OSHA standards and analogous state standards for work performed under this Agreement.

[SIGNATURE PAGE FOLLOWS]

IN WITNESS WHEREOF, the Parties have caused this Agreement which shall be effective on the date first above-written, to be executed on their behalf by the undersigned duly authorized individuals.

Settlement Trust
By:

_____
Signature

Patrick Juneau
Printed Name

Trustee
Printed Title

_____
Date

Grantee:

_____
Signature

_____
Printed Name

_____
Printed Title

_____
Date

Claims Administrator
By:

_____
Signature

Patrick Juneau
Printed Name

Claims Administrator
Printed Title

_____
Date

Schedule 1

Description of Services

Based upon the marketing plan submitted, the following deliverables must be submitted for project completion:

The Santa Rosa County Tourism Development Council will implement a spring 2016 television and cable television marketing campaign to include the airing of commercials in Birmingham, Baton Rouge, Atlanta, Columbus, Georgia, Nashville and Little Rock.

Deliverables for the project include:

1. Submit quarterly reports that outline the marketing activities that occurred during the quarter, beginning February 1, 2016.
2. Submit copies of the television and cable commercials on a disk or flash drive that aired in each market. Note: Links to emails, YouTube or other websites are not sufficient deliverables.
3. Submit copies of the flight schedules obtained from each television/cable station showing the times and dates the commercials aired.
4. Submit a final wrap-up report that summarizes the project and ensures that all of the deliverables are submitted.

February 8, 2016

ADMINISTRATIVE COMMITTEE

1. Discussion of approval of contract with Florida Department of Agriculture and Consumer Services for the funding of an agricultural Best Management Practices Technician in the amount of $147,950.

2. Discussion of federal grants management indirect cost rate agreement.

3. Discussion of authorization for application of U.S. Department of Justice Byrne Memorial Grant in the amount of $13,390 requiring no local match.

4. Discussion of transmittal of updated Local Mitigation Strategy (LMS) Plan for 2016 – 2021 to Florida Division of Emergency Management.

5. Discussion of Modification #1 to the Hazard Mitigation Grant Program agreement for Settlers Colony Drainage project.

6. Discussion of possible expansion of “Settlers Colony” drainage project utilizing available HMGP funding from Disaster 4068 (TS Debby).

7. Discussion of use of Courthouse lawn at noon Thursday, May 5, 2016 for annual National Day of Prayer observance to include use of Courtroom 300 as rain alternate.

8. Discussion of 8th Annual Sunset Stampede 5K Run/Walk on Navarre Beach Saturday, May 7, 2016 beginning at 6:30 p.m.

9. Discussion of use of county roads for Flag Day 5K Fun Run/Walk on June 11, 2016 sponsored by the Columbiettes and Knights of Columbus of St. Sylvester Catholic Church.

10. Discussion of use of the Navarre Beach Park on March 10, 2016 for the Marine Raider Memorial March, beginning at 3:00 p.m.

11. Discussion of special events permit application from Crossfit Navarre.

12. Discussion of updating county code to align with special events and other park usage.

13. **INFO ONLY**: Public Hearing items scheduled for 9:30 a.m. Thursday, February 11, 2016: NONE

Administrative Item 1

SANTA ROSA COUNTY
BOARD OF COMMISSIONERS

Santa Rosa Administrative Offices
6495 Caroline Street, Suite M
Milton, Florida 32570-4592

JAYER WILLIAMSON, District 1
ROBERT A. "BOB" COLE, District 2
W. D. "DON" SALTER, District 3
ROB WILLIAMSON, District 4
R. LANE LYNCHARD, District

TONY GOMILLION, County Administrator
ROY V. ANDREWS, County Attorney
JAYNE BELL, OMB Director

M E M O R A N D U M

TO: Board of Commissioners

FROM: Tony Gomillion, County Administrator

DATE: February 8, 2016

SUBJECT: Agreement with Florida Department of Agriculture

DISCUSSION

Mr. David Cambron from the Florida Department of Agriculture will discuss the available funding program.

BACKGROUND

Mr. Trent Mathews has been in discussions with the Department of Agriculture and Santa Rosa County for the last several months related to the agreement for the funding of an additional technician to oversee the development of "Best Management Practices" for area farms. This funding will fully fund the position and related equipment. The agreement is a reimbursement grant other than providing upfront funding in the amount of $36,987.50 for start–up cost.

COMPLETION

The County attorney has reviewed the contract documents and would finalize those documents for the Chairman's signature.

The Florida Watershed Restoration Act authorizes the Florida Department of Agriculture and Consumer Services (FDACS) to develop water quality Best Management Practices (BMPs) to address agricultural nonpoint sources to meet Total Maximum Loads (TMDLS) and otherwise protect water quality within the state.

FDACS has developed BMPs for all agricultural land uses that serve as agriculture's method of compliance.

The voluntary adoption of these practices provide farmers a "presumption of compliance" with state water quality standards. Currently there are only two farms in Santa Rosa County that have enrolled in this program with seven more on a waitlist to enroll their farming operations.

FDACS currently does not have the staff to accommodate the request for assistance in the West Florida Region but has great interest in providing this service and enrolling new farmers. It is for this reason they have approached the Blackwater Soil and Water Conservation District with grant funding, asking them to hire a BMP Conservation Technician to work with farmers in Escambia, Santa Rosa and Okaloosa counties.

FDACS has secured funding to provide Santa Rosa County reimbursement of salary, insurance, retirement, vehicle, field tools and all employee related cost for this position. Additionally, they are offering a 5% (of total employment cost) administrative fee to the county for providing this position.

Blackwater SWCD is asking Santa Rosa County to consider granting a position to be employed under terms of a special grant funded position that would work for the SWCD to accomplish the goals of enrolling agriculture producers in the BMP program and allow us to leverage state funds to address local resource concerns and improve the overall water quality of Santa Rosa County. This person would be an employee of Santa Rosa County, work multiple counties within our local region and be fully funded by the State of Florida.

Please let me know if I can provide more information concerning this request.

Trent Mathews

District Conservationist

USDA-NRCS

Santa Rosa County

Summary of the proposed Santa Rosa County Conservation Technician contract

Contract Period: Signing Date of Contract—30 June, 2017.

Funding Agency: Florida Department of Agriculture and Consumer Services (FDACS)

Scope of Work: Conservation Technician will assist Agricultural Producers with understanding Best Management Practices (BMP) for agriculture through Site Visits, Demonstrations, Workshops, Field Days, and Educational/ Technical Assistance Activities. The Conservation Technician will enroll these agricultural producers in FDACS BMP program and help them know how to implement BMPs.

County Obligations- Employ Full time Technician, Provide supervision for Technician in consultation with FDACS Project Manager, Option to purchase vehicle with FDACS contract funding for the Technician to drive for FDACS related business, Maintain Field/Office equipment purchased by contract funds, and prepare and submit Quarterly Invoices with appropriate back-up documentation for reimbursement from FDACS for the Technician's salary, benefits, and any expenses such as fuel

A contract advance of $ 36,987.50$ will be provided for start-up costs associated with Technician. The total contract amount is $147,950.00 for Agricultural Nonpoint Source BMP Implementation.

Any required or approved travel by the Technician will be reimbursed by FDACS.

Contract extensions are single period only, and not to exceed 6 months. It is mutually understood that funding for future contracts are dependent on Legislative funding. We anticipate that this will be a long-term relationship with FDACS funding this position for future years. The county agrees to maintain public records as required by "Sunshine law" provisions in Florida Statutes.

The FDACS Project Manager for the Technician Position is Dave Cambron..

The FDACS Contract Manager for this position is Hugh Thomas.

The County Contract Manager is Commissioner Lane Lynchard. At the discretion of the County Commission, Blackwater SWCD can and will serve in this role and handle associated administrative duties.

The Santa Rosa County BMP Technician will work in conjunction with the guidance of the Blackwater Soil and Water Conservation District.

The deliverables required by this contract are that the Technician maintain and submit monthly and quarterly an Activity Log, maintain certain minimum performance standards, attend staff training annually, conduct Implementation Assurance visits, assist in BMP Implementation, mail in BMP paperwork, assist in Cost Share Programs, Communicate with FDACS Project Manager, and Assist in NRCS Practices implementation.

The above in a synopsis of the contract details. To further elaborate, it is the intent of all partners to provide for the placement of a technician to focus efforts providing a service to area farmers that has previously been lacking. Best Management Practices are agricultural practices that are promoted by FDACS and Blackwater SWCD and are voluntarily adopted by local farmers that provide them a "presumption of compliance" to future environmental regulations and offers funding opportunities unavailable to operations that have not adopted these levels of conservation and enrolled in the BMP Program.

The expectation of the Blackwater SWCD is that this position will ensure that every farmer in our area has been presented this information and given the opportunity to adopt BMPs and enroll in the state monitoring program. This will serve the county by increasing conservation on private lands, providing opportunities for cost share funding and other financial assistance to local landowners and promoting non-regulatory compliance that leads to proven future water quality improvements.

It is also the intent to create a full time salaried position, provide HR benefits, office space, work vehicle, equipment, tools and supplies without Santa Rosa County incurring any associated cost.

Finally, along with the reimbursement of all expenses associated with the position, there will be a 5% administrative fee paid to Santa Rosa County. This is an opportunity for us to add and improve services without any additional expense to Santa Rosa County.

Thank you for providing producers with this valuable resource in the area.

Sincerely,

David Cambron

FDACS OAWP

NW District Representative

and

Trent Mathews

District Conservationist

USDA-NRCS

Administrative Item 2

SANTA ROSA COUNTY
BOARD OF COMMISSIONERS

Santa Rosa Administrative Offices
6495 Caroline Street, Suite M
Milton, Florida 32570-4592

JAYER WILLIAMSON, District 1
ROBERT A. "BOB" COLE, District 2
W. D. "DON" SALTER, District 3
ROB WILLIAMSON, District 4
R. LANE LYNCHARD, District 5

TONY GOMILLION, County Administrator
ROY V. ANDREWS, County Attorney
JAYNE BELL, OMB Director

MEMORANDUM

TO: Tony Gomillion, County Administrator

FROM: Erica Grancagnolo, Grants Manager

THROUGH: Sheila Fitzgerald, Grants and Special Projects Director

DATE: February 4, 2016

RE: 2CFR200 Federal Grants Management Indirect Cost Rate Agreement

RECOMMENDATION

Recommend authorization of staff to request letter from cognizant agency accepting de minimus (10%) cost rate agreement applicable to RESTORE and all other federal awards.

BACKGROUND

The newly codified Uniform Administrative Requirements, Cost Principles, and Audit Requirements for Federal Awards 2CFR200 (Omni Circular) require non-federal entities to either negotiate an indirect cost rate for federal awards, or to use a 10% de minimus rate. Any non-federal entity that has never received a negotiated indirect cost rate may elect to charge a de minimus rate of 10% of the modified total direct costs which may be used indefinitely.

Indirect costs are costs incurred for a common or joint purpose benefitting more than one cost objective, and not readily assignable to the cost objectives specifically benefitted without effort disproportionate to the results achieved. In other words, indirect costs are a way to estimate shared overhead expenses such as internet, electricity, phone service, etc. In many cases, consultant services are utilized for the analysis and computation of an entity's indirect cost rate.

After researching the cost and time associated with the computation, proposal, and negotiation of an indirect cost rate, and in light of the fact that an indirect cost analysis of Santa Rosa County may not lead to a rate significantly higher than the de minimus, it is staff's recommendation to accept the 10% de minimus rate for federal awards. Because Santa Rosa County does not typically receive a large amount of direct federal funding, the indirect cost rate would primarily apply to RESTORE. If at any time in the future, the County desires to enter into the process of negotiating an indirect cost rate, the County may do so.

Administrative Item 3

Sheriff

WENDELL HALL

SANTA ROSA COUNTY
P.O. BOX 7129
MILTON, FLORIDA 32572
PHONE (850) 983-1297
FAX (850) 983-1238

TO: Mr. Gomillion, County Administrator

FROM: Lieutenant Bo Cobb, Training Director

DATE: 2/3/2016

RE: 2015 Edward Bryne Memorial Justice Assistance Grant

The Santa Rosa Sheriff's Office is proud to announce that we are the recipients of the 2015 Edward Bryne Memorial Justice Assistance Grant #2015-DJ-BX-1040 in the amount of $13,390.00 for the SRSO AED Enhancement Program.

The Santa Rosa Sheriff's Office is seeking approval from the board to utilize the grant funds for this OAG approved Enhanced AED Program in order to equip more of our deputies on patrol with enhanced live saving capabilities. All grant money will be used to purchase 11 Cardiac Science G5 AED units.

Santa Rosa Sheriff's Office will utilize additional AED units in the Patrol Division to allow for expanded coverage of Santa Rosa County. By having more AED units available to deputies on patrol, the response time will become faster and more efficient for deputies trying to save lives. Devices will also be available for employees during rigorous training exercises that could result in the need of AED units. Please see attached abstract for grant details.

Abstract

Applicant's name: Santa Rosa County Sheriff's Office

Title of the Project: SRSO AED Enhancement Program

Goals of the Project:

The goal of this project is to enhance the ability of our sworn members to respond to critical calls in a timely manner and increase the number of lives saved within the county of Santa Rosa.

Description of the strategies to be used:

Santa Rosa Sheriff's Office will utilize additional AED units in the Patrol Division to allow for expanded coverage of Santa Rosa County. By having more AED units available to Deputies on patrol, the response time will become faster and more efficient for deputies trying to save lives. Devices will also be available for employees during rigorous training exercises that could result in the need of AED units. This project can be identified under (1) Community Policing, (2) Conferences and Training, (3) Equipment-General, (4) Officer Safety and (5) Strategic Planning.

Budget Narrative

Budget	Amount
Grant Award	$13,390
Equipment	$13,390
Narrative: All funds granted will be allocated solely to the purchase of more AED units.	

Disclosure of Pending Applications

Santa Rosa County does not have pending applications submitted within the last 12 months for federally funded grants or subgrants (including cooperative agreements) that include requests for funding to support the same project being proposed under this solicitation and will cover the identical cost items outlined in the budget narrative and worksheet in the application under this solicitation.

Awards

Awards Made in Santa Rosa, FL

Fiscal Year 2015

Number of Awards: 1 Total Amount Awarded: $13,390.00

Award Title	Awardee	Award Number	Award Amount	Solicitation Title	Solicitation Title	Program Office
SRSO AED Enhancement Program	Santa Rosa County Sheriff's Office	2015-DJ-BX-1040	$13,390.00	BJA FY 15 Edward Byrne Memorial Justice Assistance Grant (JAG) Program - Local Solicitation	Santa Rosa, FL	Bureau of Justice Assistance

as of 10/27/2015

Department of Justice

Office of Justice Programs

Bureau of Justice Assistance

Office of Justice Programs

Washington, D.C. 20531

August 31, 2015

Sheriff Wendell Hall
Santa Rosa County
6865 Willing Street SE, Suite J
Milton, FL 32570

Dear Sheriff Hall:

On behalf of Attorney General Loretta Lynch, it is my pleasure to inform you that the Office of Justice Programs has approved your application for funding under the FY 15 Edward Byrne Memorial Justice Assistance Grant (JAG) Program - Local Solicitation in the amount of $13,390 for Santa Rosa County.

Enclosed you will find the Grant Award and Special Conditions documents. This award is subject to all administrative and financial requirements, including the timely submission of all financial and programmatic reports, resolution of all interim audit findings, and the maintenance of a minimum level of cash-on-hand. Should you not adhere to these requirements, you will be in violation of the terms of this agreement and the award will be subject to termination for cause or other administrative action as appropriate.

If you have questions regarding this award, please contact:

- Program Questions, Tarasa Yates, Program Manager at (202) 305-1780; and
- Financial Questions, the Office of the Chief Financial Officer, Customer Service Center (CSC) at (800) 458-0786, or you may contact the CSC at ask.ocfo@usdoj.gov.

Congratulations, and we look forward to working with you.

Sincerely,

Denise O'Donnell
Director

Enclosures

OFFICE FOR CIVIL RIGHTS

Office of Justice Programs

Department of Justice

810 7th Street, NW
Washington, DC 20531

Tel: (202) 307-0690
TTY: (202) 307-2027
E-mail: askOCR@usdoj.gov
Website: www.ojp.usdoj.gov/ocr

August 31, 2015

Sheriff Wendell Hall
Santa Rosa County
6865 Willing Street SE, Suite J
Milton, FL 32570

Dear Sheriff Hall:

Congratulations on your recent award. In establishing financial assistance programs, Congress linked the receipt of federal funding to compliance with federal civil rights laws. The Office for Civil Rights (OCR), Office of Justice Programs (OJP), U.S. Department of Justice (DOJ) is responsible for ensuring that recipients of financial assistance from the OJP, the Office of Community Oriented Policing Services (COPS), and the Office on Violence Against Women (OVW) comply with the applicable federal civil rights laws. We at the OCR are available to help you and your organization meet the civil rights requirements that come with DOJ funding.

Ensuring Access to Federally Assisted Programs

Federal laws that apply to recipients of financial assistance from the DOJ prohibit discrimination on the basis of race, color, national origin, religion, sex, or disability in funded programs or activities, not only in employment but also in the delivery of services or benefits. A federal law also prohibits recipients from discriminating on the basis of age in the delivery of services or benefits.

In March of 2013, President Obama signed the Violence Against Women Reauthorization Act of 2013. The statute amends the Violence Against Women Act of 1994 (VAWA) by including a nondiscrimination grant condition that prohibits discrimination based on actual or perceived race, color, national origin, religion, sex, disability, sexual orientation, or gender identity. The new nondiscrimination grant condition applies to certain programs funded after October 1, 2013. The OCR and the OVW have developed answers to some frequently asked questions about this provision to assist recipients of VAWA funds to understand their obligations. The Frequently Asked Questions are available at http://ojp.gov/about/ocr/vawafaqs.htm.

Enforcing Civil Rights Laws

All recipients of federal financial assistance, regardless of the particular funding source, the amount of the grant award, or the number of employees in the workforce, are subject to prohibitions against unlawful discrimination. Accordingly, the OCR investigates recipients that are the subject of discrimination complaints from both individuals and groups. In addition, based on regulatory criteria, the OCR selects a number of recipients each year for compliance reviews, audits that require recipients to submit data showing that they are providing services equitably to all segments of their service population and that their employment practices meet equal opportunity standards.

Providing Services to Limited English Proficiency (LEP) Individuals

In accordance with DOJ guidance pertaining to Title VI of the Civil Rights Act of 1964, 42 U.S.C. § 2000d, recipients of federal financial assistance must take reasonable steps to provide meaningful access to their programs and activities for persons with limited English proficiency (LEP). See U.S. Department of Justice, Guidance to Federal Financial Assistance Recipients Regarding Title VI Prohibition Against National Origin Discrimination Affecting Limited English Proficient Persons, 67 Fed. Reg. 41,455 (2002). For more information on the civil rights responsibilities that recipients have in providing language services to LEP individuals, please see the website http://www.lep.gov.

Ensuring Equal Treatment for Faith-Based Organizations

The DOJ regulation, Equal Treatment for Faith-Based Organizations, 28 C.F.R. pt. 38, requires State Administering Agencies (SAAs) to treat faith-based organizations the same as any other applicant or recipient. The regulation prohibits SAAs from making awards or grant administration decisions on the basis of an organization's religious character or affiliation, religious name, or the religious composition of its board of directors.

The regulation also prohibits faith-based organizations from using financial assistance from the DOJ to fund inherently (or explicitly) religious activities. While faith-based organizations can engage in non-funded inherently religious activities, they must hold them separately from the program funded by the DOJ, and recipients cannot compel beneficiaries to participate in them. The Equal Treatment Regulation also makes clear that organizations participating in programs funded by the DOJ are not permitted to discriminate in the provision of services on the basis of a beneficiary's religion. For more information on the regulation, please see the OCR's website at http://www.ojp.usdoj.gov/about/ocr/equal_fbo.htm.

SAAs and faith-based organizations should also note that the Omnibus Crime Control and Safe Streets Act (Safe Streets Act) of 1968, as amended, 42 U.S.C. § 3789d(c); the Victims of Crime Act of 1984, as amended, 42 U.S.C. § 10604(e); the Juvenile Justice and Delinquency Prevention Act of 1974, as amended, 42 U.S.C. § 5672(b); and VAWA, Pub. L. No. 113-4, sec. 3(b)(4), 127 Stat. 54, 61-62 (to be codified at 42 U.S.C. § 13925(b)(13)) contain prohibitions against discrimination on the basis of religion in employment. Despite these nondiscrimination provisions, the DOJ has concluded that it may construe the Religious Freedom Restoration Act (RFRA) on a case-by-case basis to permit some faith-based organizations to receive DOJ funds while taking into account religion when hiring staff, even if the statute that authorizes the funding program generally forbids recipients from considering religion in employment decisions.
Please consult with the OCR if you have any questions about the regulation or the application of RFRA to the statutes that prohibit discrimination in employment.

Using Arrest and Conviction Records in Making Employment Decisions

The OCR issued an advisory document for recipients on the proper use of arrest and conviction records in making hiring decisions. See Advisory for Recipients of Financial Assistance from the U.S. Department of Justice on the U.S. Equal Employment Opportunity Commission's Enforcement Guidance: Consideration of Arrest and Conviction Records in Employment Decisions Under Title VII of the Civil Rights Act of 1964 (June 2013), available at http://www.ojp.usdoj.gov//about/ocr/pdfs/UseofConviction_Advisory.pdf. Recipients should be mindful that the misuse of arrest or conviction records to screen either applicants for employment or employees for retention or promotion may have a disparate impact based on race or national origin, resulting in unlawful employment discrimination. In light of the Advisory, recipients should consult local counsel in reviewing their employment practices. If warranted, recipients should also incorporate an analysis of the use of arrest and conviction records in their Equal Employment Opportunity Plans (EEOPs) (see below).

Complying with the Safe Streets Act

An organization that is a recipient of financial assistance subject to the nondiscrimination provisions of the Safe Streets Act, must meet two obligations: (1) complying with the federal regulation pertaining to the development of an EEOP (see 28 C.F.R. pt. 42, subpt. E) and (2) submitting to the OCR findings of discrimination (see 28 C.F.R. §§ 42.204(c), .205(c)(5)).

Meeting the EEOP Requirement

If your organization has less than fifty employees or receives an award of less than $25,000 or is a nonprofit organization, a medical institution, an educational institution, or an Indian tribe, then it is exempt from the EEOP requirement. To claim the exemption, your organization must complete and submit Section A of the Certification Form, which is available online at http://www.ojp.usdoj.gov/about/ocr/pdfs/cert.pdf.

If your organization is a government agency or private business and receives an award of $25,000 or more, but less than $500,000, and has fifty or more employees (counting both full- and part-time employees but excluding political appointees), then it has to prepare a Utilization Report (formerly called an EEOP Short Form), but it does not have to submit the report to the OCR for review. Instead, your organization has to maintain the Utilization Report on file and make it available for review on request. In addition, your organization has to complete Section B of the Certification Form and return it to the OCR. The Certification Form is available at http://www.ojp.usdoj.gov/about/ocr/pdfs/cert.pdf.

If your organization is a government agency or private business and has received an award for $500,000 or more and has fifty or more employees (counting both full- and part-time employees but excluding political appointees), then it has to prepare a Utilization Report (formerly called an EEOP Short Form) and submit it to the OCR for review within sixty days from the date of this letter. For assistance in developing a Utilization Report, please consult the OCR's website at http://www.ojp.usdoj.gov/about/ocr/eeop.htm. In addition, your organization has to complete Section C of the Certification Form and return it to the OCR. The Certification Form is available at http://www.ojp.usdoj.gov/about/ocr/pdfs/cert.pdf.

To comply with the EEOP requirements, you may request technical assistance from an EEOP specialist at the OCR by telephone at (202) 307-0690, by TTY at (202) 307-2027, or by e-mail at EEOsubmisson@usdoj.gov.

Meeting the Requirement to Submit Findings of Discrimination

If in the three years prior to the date of the grant award, your organization has received an adverse finding of discrimination based on race, color, national origin, religion, or sex, after a due-process hearing, from a state or federal court or from a state or federal administrative agency, your organization must send a copy of the finding to the OCR.

Ensuring the Compliance of Subrecipients

SAAs must have standard assurances to notify subrecipients of their civil rights obligations, written procedures to address discrimination complaints filed against subrecipients, methods to monitor subrecipients' compliance with civil rights requirements, and a program to train subrecipients on applicable civil rights laws. In addition, SAAs must submit to the OCR every three years written Methods of Administration (MOA) that summarize the policies and procedures that they have implemented to ensure the civil rights compliance of subrecipients. For more information on the MOA requirement, see http://www.ojp.usdoj.gov/funding/other_requirements.htm.

If the OCR can assist you in any way in fulfilling your organization's civil rights responsibilities as a recipient of federal financial assistance, please contact us.

Sincerely,

Michael L. Alston
Director

cc: Grant Manager
Financial Analyst

Department of Justice

Office of Justice Programs

Bureau of Justice Assistance

Washington, D.C. 20531

Memorandum To: Official Grant File

From: Orbin Terry, NEPA Coordinator

Subject: Incorporates NEPA Compliance in Further Developmental Stages for Santa Rosa County

The Edward Byrne Memorial Justice Assistance Grant Program (JAG) allows states and local governments to support a broad range of activities to prevent and control crime and to improve the criminal justice system, some of which could have environmental impacts. All recipients of JAG funding must assist BJA in complying with NEPA and other related federal environmental impact analyses requirements in the use of grant funds, whether the funds are used directly by the grantee or by a subgrantee or third party. Accordingly, prior to obligating funds for any of the specified activities, the grantee must first determine if any of the specified activities will be funded by the grant.

The specified activities requiring environmental analysis are:
a. New construction;
b. Any renovation or remodeling of a property located in an environmentally or historically sensitive area, including properties located within a 100-year flood plain, a wetland, or habitat for endangered species, or a property listed on or eligible for listing on the National Register of Historic Places;
c. A renovation, lease, or any proposed use of a building or facility that will either (a) result in a change in its basic prior use or (b) significantly change its size;
d. Implementation of a new program involving the use of chemicals other than chemicals that are (a) purchased as an incidental component of a funded activity and (b) traditionally used, for example, in office, household, recreational, or education environments; and
e. Implementation of a program relating to clandestine methamphetamine laboratory operations, including the identification, seizure, or closure of clandestine methamphetamine laboratories.

Complying with NEPA may require the preparation of an Environmental Assessment and/or an Environmental Impact Statement, as directed by BJA. Further, for programs relating to methamphetamine laboratory operations, the preparation of a detailed Mitigation Plan will be required. For more information about Mitigation Plan requirements, please see http://www.ojp.usdoj.gov/BJA/resource/nepa.html.

Please be sure to carefully review the grant conditions on your award document, as it may contain more specific information about environmental compliance.

Department of Justice
Office of Justice Programs

Bureau of Justice Assistance

GRANT MANAGER'S MEMORANDUM, PT. I: PROJECT SUMMARY

Grant

PROJECT NUMBER
2015-DJ-BX-1040

This project is supported under FY15(BJA - JAG) 42 USC 3750, et seq.

1. STAFF CONTACT (Name & telephone number)

Tarasa Yates
(202) 305-1780

2. PROJECT DIRECTOR (Name, address & telephone number)

Donald Cobb
Lieutenant
5755 East Milton Road
Milton, FL 32583-7913
(850) 983-1297

3a. TITLE OF THE PROGRAM

BJA FY 15 Edward Byrne Memorial Justice Assistance Grant (JAG) Program - Local Solicitation

3b. POMS CODE (SEE INSTRUCTIONS ON REVERSE)

4. TITLE OF PROJECT

SRSO AED Enhancement Program

5. NAME & ADDRESS OF GRANTEE

Santa Rosa County
6865 Willing Street SE, Suite J
Milton, FL 32570

6. NAME & ADRESS OF SUBGRANTEE

7. PROGRAM PERIOD

FROM: 10/01/2014 TO: 09/30/2016

8. BUDGET PERIOD

FROM: 10/01/2014 TO: 09/30/2016

9. AMOUNT OF AWARD

$ 13,390

10. DATE OF AWARD

08/31/2015

11. SECOND YEAR'S BUDGET

12. SECOND YEAR'S BUDGET AMOUNT

13. THIRD YEAR'S BUDGET PERIOD

14. THIRD YEAR'S BUDGET AMOUNT

15. SUMMARY DESCRIPTION OF PROJECT (See instruction on reverse)

The Edward Byrne Memorial Justice Assistance Grant Program (JAG) allows states and units of local government, including tribes, to support a broad range of activities to prevent and control crime based on their own state and local needs and conditions. Grant funds can be used for state and local initiatives, technical assistance, training, personnel, equipment, supplies, contractual support, and information systems for criminal justice, including for any one or more of the following program areas: 1) law enforcement programs; 2) prosecution and court programs; 3) prevention and education programs; 4) corrections and community corrections programs; 5) drug treatment and enforcement programs; 6) planning, evaluation, and technology improvement programs; and 7) crime victim and witness programs (other than compensation).

The Santa Rosa County Sheriff's Office will use their 2015 JAG award to purchase Advanced External Defibrillators (AED) to sworn memebers so that they have the ability to respond to critical calls in a timely manner and increase the number of lives saved within the county. NCA/NCF

Department of Justice
Office of Justice Programs
Bureau of Justice Assistance

Grant

1. RECIPIENT NAME AND ADDRESS (Including Zip Code)
Santa Rosa County
6865 Willing Street SE, Suite J
Milton, FL 32570

4. AWARD NUMBER: 2015-DJ-BX-1040

5. PROJECT PERIOD: FROM 10/01/2014 TO 09/30/2016
BUDGET PERIOD: FROM 10/01/2014 TO 09/30/2016

6. AWARD DATE 08/31/2015

7. ACTION
Initial

2a. GRANTEE IRS/VENDOR NO.
596000842

8. SUPPLEMENT NUMBER
00

2b. GRANTEE DUNS NO.
061419599

9. PREVIOUS AWARD AMOUNT $ 0

3. PROJECT TITLE
SRSO AED Enhancement Program

10. AMOUNT OF THIS AWARD $ 13,390

11. TOTAL AWARD $ 13,390

12. SPECIAL CONDITIONS
THE ABOVE GRANT PROJECT IS APPROVED SUBJECT TO SUCH CONDITIONS OR LIMITATIONS AS ARE SET FORTH ON THE ATTACHED PAGE(S).

13. STATUTORY AUTHORITY FOR GRANT
This project is supported under FY15(BJA - JAG) 42 USC 3750, et seq.

14. CATALOG OF DOMESTIC FEDERAL ASSISTANCE (CFDA Number)
16.738 - Edward Byrne Memorial Justice Assistance Grant Program

15. METHOD OF PAYMENT
GPRS

AGENCY APPROVAL

16. TYPED NAME AND TITLE OF APPROVING OFFICIAL
Denise O'Donnell
Director

17. SIGNATURE OF APPROVING OFFICIAL

GRANTEE ACCEPTANCE

18. TYPED NAME AND TITLE OF AUTHORIZED GRANTEE OFFICIAL
Wendell Hall
Sheriff

19. SIGNATURE OF AUTHORIZED RECIPIENT OFFICIAL

19A. DATE
9-2-15

AGENCY USE ONLY

20. ACCOUNTING CLASSIFICATION CODES

FISCAL YEAR	FUND CODE	BUD. ACT.	OFC.	DIV. REG.	SUB.	POMS	AMOUNT
X	B	DJ	80	00	00		13390

21. PDJUGT0622

OJP FORM 4000/2 (REV. 5-87) PREVIOUS EDITIONS ARE OBSOLETE.

OJP FORM 4000/2 (REV. 4-88)

SPECIAL CONDITIONS

1. Applicability of Part 200 Uniform Requirements

   The Uniform Administrative Requirements, Cost Principles, and Audit Requirements in 2 C.F.R. Part 200, as adopted and supplemented by the Department of Justice (DOJ) in 2 C.F.R. Part 2800 (the "Part 200 Uniform Requirements") apply to this 2015 award from the Office of Justice Programs (OJP). For this 2015 award, the Part 200 Uniform Requirements, which were first adopted by DOJ on December 26, 2014, supersede, among other things, the provisions of 28 C.F.R. Parts 66 and 70, as well as those of 2 C.F.R. Parts 215, 220, 225, and 230.

   If this 2015 award supplements funds previously awarded by OJP under the same award number, the Part 200 Uniform Requirements apply with respect to all award funds (whether derived from the initial award or a supplemental award) that are obligated on or after the acceptance date of this 2015 award.

   Potential availability of grace period for procurement standards: Under the Part 200 Uniform Requirements, a time-limited grace period may be available under certain circumstances to allow for transition from policies and procedures that complied with previous standards for procurements under federal awards to policies and procedures that comply with the new standards (that is, to those at 2 C.F.R. 200.317 through 200.326).

   For more information on the Part 200 Uniform Requirements, including information regarding the potentially-available grace period described above, see the Office of Justice Programs (OJP) website at http://ojp.gov/funding/Part200UniformRequirements.htm.

   In the event that an award-related question arises from documents or other materials prepared or distributed by OJP that may appear to conflict with, or differ in some way from, the provisions of the Part 200 Uniform Requirements, the recipient is to contact OJP promptly for clarification.

2. The recipient agrees to comply with the Department of Justice Grants Financial Guide as posted on the OJP website (currently, the "2015 DOJ Grants Financial Guide").

3. The recipient acknowledges that failure to submit an acceptable Equal Employment Opportunity Plan (if recipient is required to submit one pursuant to 28 C.F.R. Section 42.302) that is approved by the Office for Civil Rights is a violation of the Standard Assurances executed by the recipient, and may result in suspension of funding until such time as the recipient is in compliance, or termination of the award.

4. The recipient understands and agrees that OJP may withhold award funds, or may impose other related requirements, if the recipient does not satisfactorily and promptly address outstanding issues from audits required by the Part 200 Uniform Requirements (or by the terms of this award), or other outstanding issues that arise in connection with audits, investigations, or reviews of DOJ awards.

5. Recipient understands and agrees that it cannot use any federal funds, either directly or indirectly, in support of the enactment, repeal, modification or adoption of any law, regulation or policy, at any level of government, without the express prior written approval of OJP.

6. The recipient and any subrecipients must promptly refer to the DOJ OIG any credible evidence that a principal, employee, agent, subrecipient, contractor, subcontractor, or other person has -- (1) submitted a claim for award funds that violates the False Claims Act; or (2) committed a criminal or civil violation of laws pertaining to fraud, conflict of interest, bribery, gratuity, or similar misconduct involving award funds. Potential fraud, waste, abuse, or misconduct should be reported to the OIG by - mail: Office of the Inspector General U.S. Department of Justice Investigations Division 950 Pennsylvania Avenue, N.W. Room 4706 Washington, DC 20530 e-mail: oig.hotline@usdoj.gov hotline: (contact information in English and Spanish): (800) 869-4499 or hotline fax: (202) 616-9881 Additional information is available from the DOJ OIG website at www.usdoj.gov/oig

wt

SPECIAL CONDITIONS

7. Restrictions and certifications regarding non-disclosure agreements and related matters

No recipient or subrecipient under this award, or entity that receives a contract or subcontract with any funds under this award, may require any employee or contractor to sign an internal confidentiality agreement or statement that prohibits or otherwise restricts, or purports to prohibit or restrict, the reporting (in accordance with law) of waste, fraud, or abuse to an investigative or law enforcement representative of a federal department or agency authorized to receive such information.

The foregoing is not intended, and shall not be understood by the agency making this award, to contravene requirements applicable to Standard Form 312 (which relates to classified information), Form 4414 (which relates to sensitive compartmented information), or any other form issued by a federal department or agency governing the nondisclosure of classified information.

1. In accepting this award, the recipient --

a. represents that it neither requires nor has required internal confidentiality agreements or statements from employees or contractors that currently prohibit or otherwise currently restrict (or purport to prohibit or restrict) employees or contractors from reporting waste, fraud, or abuse as described above; and

b. certifies that, if it learns or is notified that it is or has been requiring its employees or contractors to execute agreements or statements that prohibit or otherwise restrict (or purport to prohibit or restrict), reporting of waste, fraud, or abuse as described above, it will immediately stop any further obligations of award funds, will provide prompt written notification to the agency making this award, and will resume (or permit resumption of)such obligations only if expressly authorized to do so by that agency.

2. If the recipient does or is authorized to make subawards or contracts under this award --

a. it represents that --

(1) it has determined that no other entity that the recipient's application proposes may or will receive award funds (whether through a subaward, contract, or subcontract) either requires or has required internal confidentiality agreements or statements from employees or contractors that currently prohibit or otherwise currently restrict (or purport to prohibit or restrict) employees or contractors from reporting waste, fraud, or abuse as described above; and

(2) it has made appropriate inquiry, or otherwise has an adequate factual basis, to support this representation; and

b. it certifies that, if it learns or is notified that any subrecipient, contractor, or subcontractor entity that receives funds under this award is or has been requiring its employees or contractors to execute agreements or statements that prohibit or otherwise restrict (or purport to prohibit or restrict), reporting of waste, fraud, or abuse as described above, it will immediately stop any further obligations of award funds to or by that entity, will provide prompt written notification to the agency making this award, and will resume (or permit resumption of) such obligations only if expressly authorized to do so by that agency.

8. Recipient understands and agrees that it cannot use any federal funds, either directly or indirectly, in support of any contract or subaward to either the Association of Community Organizations for Reform Now (ACORN) or its subsidiaries, without the express prior written approval of OJP.

9. The recipient agrees to comply with any additional requirements that may be imposed during the grant performance period if the agency determines that the recipient is a high-risk grantee. Cf. 28 C.F.R. parts 66, 70.

wt

SPECIAL CONDITIONS

10. The recipient agrees to comply with applicable requirements regarding registration with the System for Award Management (SAM) (or with a successor government-wide system officially designated by OMB and OJP). The recipient also agrees to comply with applicable restrictions on subawards to first-tier subrecipients that do not acquire and provide a Data Universal Numbering System (DUNS) number. The details of recipient obligations are posted on the Office of Justice Programs web site at http://www.ojp.gov/funding/sam.htm (Award condition: Registration with the System for Award Management and Universal Identifier Requirements), and are incorporated by reference here. This special condition does not apply to an award to an individual who received the award as a natural person (i.e., unrelated to any business or non-profit organization that he or she may own or operate in his or her name).

11. Pursuant to Executive Order 13513, "Federal Leadership on Reducing Text Messaging While Driving," 74 Fed. Reg. 51225 (October 1, 2009), the Department encourages recipients and sub recipients to adopt and enforce policies banning employees from text messaging while driving any vehicle during the course of performing work funded by this grant, and to establish workplace safety policies and conduct education, awareness, and other outreach to decrease crashes caused by distracted drivers.

12. The recipient agrees to comply with all applicable laws, regulations, policies, and guidance (including specific cost limits, prior approval and reporting requirements, where applicable) governing the use of federal funds for expenses related to conferences, meetings, trainings, and other events, including the provision of food and/or beverages at such events, and costs of attendance at such events. Information on rules applicable to this award appears in the DOJ Grants Financial Guide (currently, as section 3.10 of "Postaward Requirements" in the "2015 DOJ Grants Financial Guide").

13. The recipient understands and agrees that any training or training materials developed or delivered with funding provided under this award must adhere to the OJP Training Guiding Principles for Grantees and Subgrantees, available at http://www.ojp.usdoj.gov/funding/ojptrainingguidingprinciples.htm.

14. The recipient agrees that if it currently has an open award of federal funds or if it receives an award of federal funds other than this OJP award, and those award funds have been, are being, or are to be used, in whole or in part, for one or more of the identical cost items for which funds are being provided under this OJP award, the recipient will promptly notify, in writing, the grant manager for this OJP award, and, if so requested by OJP, seek a budget-modification or change-of-project-scope grant adjustment notice (GAN) to eliminate any inappropriate duplication of funding.

15. The recipient understands and agrees that award funds may not be used to discriminate against or denigrate the religious or moral beliefs of students who participate in programs for which financial assistance is provided from those funds, or of the parents or legal guardians of such students.

16. The recipient understands and agrees that - (a) No award funds may be used to maintain or establish a computer network unless such network blocks the viewing, downloading, and exchanging of pornography, and (b) Nothing in subsection (a) limits the use of funds necessary for any Federal, State, tribal, or local law enforcement agency or any other entity carrying out criminal investigations, prosecution, or adjudication activities.

17. A recipient that is eligible under the Part 200 Uniform Requirements to use the "de minimis" indirect cost rate described in 2 C.F.R. 200.414(f), and that elects to use the "de minimis" indirect cost rate, must advise OJP in writing of both its eligibility and its election, and must comply with all associated requirements in the Part 200 Uniform Requirements. The "de minimis" rate may be applied only to modified total direct costs (MTDC).

18. The recipient must collect, maintain, and provide to OJP, data that measure the performance and effectiveness of activities under this award, in the manner, and within the timeframes, specified in the program solicitation, or as otherwise specified by OJP. Data collection supports compliance with the Government Performance and Results Act (GPRA) and the GPRA Modernization Act, and other applicable laws.

SPECIAL CONDITIONS

19. The recipient agrees to comply with OJP grant monitoring guidelines, protocols, and procedures, and to cooperate with BJA and OCFO on all grant monitoring requests, including requests related to desk reviews, enhanced programmatic desk reviews, and/or site visits. The recipient agrees to provide to BJA and OCFO all documentation necessary to complete monitoring tasks, including documentation related to any subawards made under this award. Further, the recipient agrees to abide by reasonable deadlines set by BJA and OCFO for providing the requested documents. Failure to cooperate with BJA's/OCFO's grant monitoring activities may result in sanctions affecting the recipient's DOJ awards, including, but not limited to: withholdings and/or other restrictions on the recipient's access to grant funds; referral to the Office of the Inspector General for audit review; designation of the recipient as a DOJ High Risk grantee; or termination of an award(s).

20. The recipient understands and agrees that it has a responsibility to monitor its subrecipients' compliance with applicable federal civil rights laws. The recipient agrees to submit written Methods of Administration (MOA) for ensuring subrecipients' compliance to the OJP's Office for Civil Rights at CivilRightsMOA@usdoj.gov within 90 days of receiving the grant award, and to make supporting documentation available for review upon request by OJP or any other authorized persons. The required elements of the MOA are set forth at http://www.ojp.usdoj.gov/funding/other_requirements.htm, under the heading, "Civil Rights Compliance Specific to State Administering Agencies."

21. In order to promote information sharing and enable interoperability among disparate systems across the justice and public safety community, OJP requires the grantee to comply with DOJ's Global Justice Information Sharing Initiative (DOJ's Global) guidelines and recommendations for this particular grant. Grantee shall conform to the Global Standards Package (GSP) and all constituent elements, where applicable, as described at: http://www.it.ojp.gov/gsp_grantcondition. Grantee shall document planned approaches to information sharing and describe compliance to the GSP and appropriate privacy policy that protects shared information, or provide detailed justification for why an alternative approach is recommended.

22. To avoid duplicating existing networks or IT systems in any initiatives funded by BJA for law enforcement information sharing systems which involve interstate connectivity between jurisdictions, such systems shall employ, to the extent possible, existing networks as the communication backbone to achieve interstate connectivity, unless the grantee can demonstrate to the satisfaction of BJA that this requirement would not be cost effective or would impair the functionality of an existing or proposed IT system.

23. The recipient agrees that any information technology system funded or supported by OJP funds will comply with 28 C.F.R. Part 23, Criminal Intelligence Systems Operating Policies, if OJP determines this regulation to be applicable. Should OJP determine 28 C.F.R. Part 23 to be applicable, OJP may, at its discretion, perform audits of the system, as per the regulation. Should any violation of 28 C.F.R. Part 23 occur, the recipient may be fined as per 42 U.S.C. 3789g(c)-(d). Recipient may not satisfy such a fine with federal funds.

24. The grantee agrees to comply with the applicable requirements of 28 C.F.R. Part 38, the Department of Justice regulation governing "Equal Treatment for Faith Based Organizations" (the "Equal Treatment Regulation"). The Equal Treatment Regulation provides in part that Department of Justice grant awards of direct funding may not be used to fund any inherently religious activities, such as worship, religious instruction, or proselytization. Recipients of direct grants may still engage in inherently religious activities, but such activities must be separate in time or place from the Department of Justice funded program, and participation in such activities by individuals receiving services from the grantee or a sub-grantee must be voluntary. The Equal Treatment Regulation also makes clear that organizations participating in programs directly funded by the Department of Justice are not permitted to discriminate in the provision of services on the basis of a beneficiary's religion. Notwithstanding any other special condition of this award, faith-based organizations may, in some circumstances, consider religion as a basis for employment. See http://www.ojp.gov/about/ocr/equal_fbo.htm.

SPECIAL CONDITIONS

25. Grantee agrees to comply with the requirements of 28 C.F.R. Part 46 and all Office of Justice Programs policies and procedures regarding the protection of human research subjects, including obtainment of Institutional Review Board approval, if appropriate, and subject informed consent.

26. Grantee agrees to comply with all confidentiality requirements of 42 U.S.C. section 3789g and 28 C.F.R. Part 22 that are applicable to collection, use, and revelation of data or information. Grantee further agrees, as a condition of grant approval, to submit a Privacy Certificate that is in accord with requirements of 28 C.F.R. Part 22 and, in particular, section 22.23.

27. Award recipients must verify Point of Contact(POC), Financial Point of Contact (FPOC), and Authorized Representative contact information in GMS, including telephone number and e-mail address. If any information is incorrect or has changed, a Grant Adjustment Notice (GAN) must be submitted via the Grants Management System (GMS) to document changes.

28. The grantee agrees that within 120 days of award acceptance, each current member of a law enforcement task force funded with these funds who is a task force commander, agency executive, task force officer, or other task force member of equivalent rank, will complete required online (internet-based) task force training. Additionally, all future task force members are required to complete this training once during the life of this award, or once every four years if multiple awards include this requirement. The training is provided free of charge online through BJA's Center for Task Force Integrity and Leadership (www.ctfli.org). This training addresses task force effectiveness as well as other key issues including privacy and civil liberties/rights, task force performance measurement, personnel selection, and task force oversight and accountability. When BJA funding supports a task force, a task force personnel roster should be compiled and maintained, along with course completion certificates, by the grant recipient. Additional information is available regarding this required training and access methods via BJA's web site and the Center for Task Force Integrity and Leadership (www.ctfli.org).

29. The recipient agrees to participate in BJA-sponsored training events, technical assistance events, or conferences held by BJA or its designees, upon BJA's request.

30. All procurement (contract) transactions under this award must be conducted in a manner that is consistent with applicable Federal and State law, and with Federal procurement standards specified in regulations governing Federal awards to non-Federal entities. Procurement (contract) transactions should be competitively awarded unless circumstances preclude competition. Noncompetitive (e.g., sole source) procurements by the award recipient in excess of the Simplified Acquisition Threshold (currently $150,000) set out in the Federal Acquisition Regulation must receive prior approval from the awarding agency, and must otherwise comply with rules governing such procurements found in the current edition of the OJP Financial Guide.

31. Approval of this award does not indicate approval of any consultant rate in excess of $650 per day. A detailed justification must be submitted to and approved by the Office of Justice Programs (OJP) program office prior to obligation or expenditure of such funds.

32. Program income (as defined in the Part 200 Uniform Requirements) must be used in accordance with the provisions of the Part 200 Uniform Requirements. Program income earnings and expenditures both must be reported on the quarterly Federal Financial Report, SF 425.

WK

SPECIAL CONDITIONS

33. Award recipients must submit quarterly a Federal Financial Report (SF-425) and annual performance reports through GMS (https://grants.ojp.usdoj.gov). Consistent with the Department's responsibilities under the Government Performance and Results Act (GPRA), P.L. 103-62, applicants who receive funding under this solicitation must provide data that measure the results of their work. Therefore, quarterly performance metrics reports must be submitted through BJA's Performance Measurement Tool (PMT) website (www.bjaperformancetools.org). For more detailed information on reporting and other JAG requirements, refer to the JAG reporting requirements webpage. Failure to submit required JAG reports by established deadlines may result in the freezing of grant funds and future High Risk designation.

34. The recipient agrees that funds received under this award will not be used to supplant State or local funds, but will be used to increase the amounts of such funds that would, in the absence of Federal funds, be made available for law enforcement activities.

35. The recipient agrees to monitor subawards under this JAG award in accordance with all applicable statutes, regulations, OMB circulars, and guidelines, including the OJP Financial Guide, and to include the applicable conditions of this award in any subaward. The recipient is responsible for oversight of subrecipient spending and monitoring of specific outcomes and benefits attributable to use of JAG funds by subrecipients. The recipient agrees to submit, upon request, documentation of its policies and procedures for monitoring of subawards under this award.

36. The recipient agrees to submit a signed certification that that all law enforcement agencies receiving vests purchased with JAG funds have a written "mandatory wear" policy in effect. Fiscal agents and state agencies must keep signed certifications on file for any subrecipients planning to utilize JAG funds for ballistic-resistant and stab-resistant body armor purchases. This policy must be in place for at least all uniformed officers before any JAG funding can be used by the agency for body armor. There are no requirements regarding the nature of the policy other than it being a mandatory wear policy for all uniformed officers while on duty.

37. Ballistic-resistant and stab-resistant body armor purchased with JAG funds may be purchased at any threat level, make or model, from any distributor or manufacturer, as long as the vests have been tested and found to comply with applicable National Institute of Justice ballistic or stab standards and are listed on the NIJ Compliant Body Armor Model List (http://nij.gov). In addition, ballistic-resistant and stab-resistant body armor purchased must be American-made. The latest NIJ standard information can be found here: http://www.nij.gov/topics/technology/body-armor/safety-initiative.htm.

38. JAG funds may be used to purchase vests for an agency, but they may not be used as the 50% match for purposes of the Bulletproof Vest Partnership (BVP) program.

39. The recipient is required to establish a trust fund account. (The trust fund may or may not be an interest-bearing account.) The fund, including any interest, may not be used to pay debts or expenses incurred by other activities beyond the scope of the Edward Byrne Memorial Justice Assistance Grant Program (JAG). The recipient also agrees to obligate the grant funds in the trust fund (including any interest earned) during the period of the grant and expend within 90 days thereafter. Any unobligated or unexpended funds, including interest earned, must be returned to the Office of Justice Programs at the time of closeout.

WA

SPECIAL CONDITIONS

40. The grantee agrees to assist BJA in complying with the National Environmental Policy Act (NEPA), the National Historic Preservation Act, and other related federal environmental impact analyses requirements in the use of these grant funds, either directly by the grantee or by a subgrantee. Accordingly, the grantee agrees to first determine if any of the following activities will be funded by the grant, prior to obligating funds for any of these purposes. If it is determined that any of the following activities will be funded by the grant, the grantee agrees to contact BJA.

    The grantee understands that this special condition applies to its following new activities whether or not they are being specifically funded with these grant funds. That is, as long as the activity is being conducted by the grantee, a subgrantee, or any third party and the activity needs to be undertaken in order to use these grant funds, this special condition must first be met. The activities covered by this special condition are:
    a. New construction;
    b. Minor renovation or remodeling of a property located in an environmentally or historically sensitive area, including properties located within a 100-year flood plain, a wetland, or habitat for endangered species, or a property listed on or eligible for listing on the National Register of Historic Places;
    c. A renovation, lease, or any proposed use of a building or facility that will either (a) result in a change in its basic prior use or (b) significantly change its size;
    d. Implementation of a new program involving the use of chemicals other than chemicals that are (a) purchased as an incidental component of a funded activity and (b) traditionally used, for example, in office, household, recreational, or education environments; and
    e. Implementation of a program relating to clandestine methamphetamine laboratory operations, including the identification, seizure, or closure of clandestine methamphetamine laboratories.

    The grantee understands and agrees that complying with NEPA may require the preparation of an Environmental Assessment and/or an Environmental Impact Statement, as directed by BJA. The grantee further understands and agrees to the requirements for implementation of a Mitigation Plan, as detailed at http://www.ojp.usdoj.gov/BJA/resource/nepa.html, for programs relating to methamphetamine laboratory operations.

    Application of This Special Condition to Grantee's Existing Programs or Activities: For any of the grantee's or its subgrantees' existing programs or activities that will be funded by these grant funds, the grantee, upon specific request from BJA, agrees to cooperate with BJA in any preparation by BJA of a national or program environmental assessment of that funded program or activity.

41. BJA strongly encourages the recipient to submit annual (or more frequent) JAG success stories. To submit a success story, sign in to your My BJA account at https://www.bja.gov/Login.aspx to access the Success Story Submission form. If you do not yet have a My BJA account, please register at https://www.bja.gov/profile.aspx. Once you register, one of the available areas on your My BJA page will be "My Success Stories". Within this box, you will see an option to add a Success Story. Once reviewed and approved by BJA, all success stories will appear on the new BJA Success Story web page at https://www.bja.gov/SuccessStoryList.aspx.

42. Recipient understands and agrees that award funds may not be used for items that are listed on the Prohibited Expenditure List at the time of purchase or acquisition, including as the list may be amended from time to time. The Prohibited Expenditure list may be accessed here: https://www.bja.gov/funding/JAGControlledPurchaseList.pdf.

43. Recipient understands and agrees that award funds may not be used for items that are listed on the Controlled Expenditure List at the time of purchase or acquisition, including as the list may be amended from time to time, without explicit written prior approval from BJA. The Controlled Expenditure List, and instructions on how to request approval for purchase or acquisitions may be accessed here: https://www.bja.gov/funding/JAGControlledPurchaseList.pdf

wt

SPECIAL CONDITIONS

44. Recipient understands and agrees that the purchase or acquisition of any item on the Controlled Expenditure List at the time of purchase or acquisition, including as the list may be amended from time to time, with award funds by an agency will trigger a requirement that the agency collect and retain (for at least 3 years) certain information about the use of 1) any federally-acquired Controlled Equipment in the agency's inventory, and 2) any other controlled equipment in the same category as the federally-acquired controlled equipment in the agency's inventory, regardless of source; and make that information available to BJA upon request. Details about what information must be collected and retained may be accessed here: https://www.whitehouse.gov/sites/default/files/docs/le_equipment_wg_final_report_final.pdf

45. Recipient understands and agrees that, notwithstanding 2 CFR § 200.313, no equipment listed on the Controlled Expenditure List that is purchased under this award may be transferred or sold to a third party, except as described below:

    a. Agencies may transfer or sell any controlled equipment, except riot helmets and riot shields, to a Law Enforcement Agency (LEA) after obtaining prior written approval from BJA. As a condition of that approval, the acquiring LEA will be required to submit information and certifications to BJA as if it was requesting approval to use award fund for the initial purchase of items on the Controlled Expenditure List.
    b. Agencies may not transfer or sell any riot helmets or riot shields purchased under this award.
    c. Agencies may not transfer or sell any Controlled Equipment purchased under this award to non-LEAs, with the exception of fixed wing aircraft, rotary wing aircraft, and command and control vehicles. Before any such transfer or sale is finalized, the agency must obtain prior written approval from BJA. All law enforcement-related and other sensitive or potentially dangerous components, and all law enforcement insignias and identifying markings must be removed prior to transfer or sale.

    Recipient further understands and agrees to notify BJA prior to the disposal of any items on the Controlled Expenditure List purchased under this award, and to abide by any applicable laws and regulations in such disposal.

46. Recipient understands and agrees that failure to comply with conditions related to Prohibited or Controlled Expenditures may result in a prohibition from further Controlled Expenditure approval under this or other federal awards.

47. Recipient understands that the initial period of availability of funds for this award is two years. Recipient further understands that any requests for additional time for performance of this award, up to two additional years, will be granted automatically, pursuant to 42 U.S.C. § 3751(f) and in accordance with current fiscal year solicitation. Requests for additional time beyond a four year grant period will be subject to the discretion of the Director of the Bureau of Justice Assistance.

48. Recipient may not expend or drawdown funds until the Bureau of Justice Assistance, Office of Justice Programs has reviewed and approved the Abstract portion of the application and has issued a Grant Adjustment Notice (GAN) informing the recipient of the approval.

49. Recipient may not expend, or drawdown funds until the Bureau of Justice Assistance, Office of Justice Programs has reviewed and approved the Budget Narrative portion of the application and has issued a Grant Adjustment Notice (GAN) informing the recipient of the approval.

50. Recipient may not expend or drawdown funds until the Bureau of Justice Assistance (BJA) has received documentation demonstrating that the state or local governing body review and public comment requirements have been met and a Grant Adjustment Notice (GAN) has been approved releasing this special condition.

wt

SPECIAL CONDITIONS

51. The recipient may not obligate, expend, or draw down any award funds until: (1) it has provided to the grant manager for this OJP award either an "applicant disclosure of pending applications" for federal funding or a specific affirmative statement that no such pending applications (whether direct or indirect) exist, in accordance with the detailed instructions in the program solicitation, (2) OJP has completed its review of the information provided and of any supplemental information it may request, (3) the recipient has made any adjustments to the award that OJP may require to prevent or eliminate any inappropriate duplication of funding (e.g., budget modification, project scope adjustment), (4) if appropriate adjustments to a discretionary award cannot be made, the recipient has agreed in writing to any necessary reduction of the award amount in any amount sufficient to prevent duplication (as determined by OJP), and (5) a Grant Adjustment Notice has been issued removing this special condition.

wt

Administrative Item 4

Santa Rosa County
Board of County Commissioners

Sheila Fitzgerald, Special Projects/Grants Director
6495 Caroline Street, Milton, FL. 32570-4978, Phone (850) 983-1848 / Fax (850) 983-1944

MEMORANDUM

TO: Tony Gomillion

FROM: Sheila Fitzgerald

DATE: February 3, 2016

SUBJECT: Local Mitigation Strategy (LMS) Plan – 2016-2021 Update Transmittal

RECOMMENDATION:

That the board approve transmittal of 2016-2021 LMS Plan to the Florida Division of Emergency Management for review.

BACKGROUND

The County must have approved hazard mitigation plan in order to be eligible for mitigation related grant funding. The Local Mitigation Strategy is responsible for maintaining and updating the LMS plan in accordance with FEMA and the Division's requirements. The LMS is largely supported by county staff. The current LMS plan expires on June 9, 2016. Efforts to update the plan began in April 2015. A draft of the plan was placed on the county's website on December 31, 2015. A public meeting was held on January 7, 2016 to present the plan to the public and solicit input. Please refer to the attached slides which detail the process undertaken to update the plan as well as a description of the plan contents.

NEXT STEPS

Upon approval by the board, staff will make any necessary final edits and will transmit to the Florida Division of Emergency Management. Any requested information or edits needed during the review will be approved by the Local Mitigation Strategy if necessary and completed by staff. Upon approval by the State and FEMA, the plan will be formally adopted by the County via resolution as well as each of the jurisdictions. The 2016-2021 plan is expected to be approved prior to June 9, 2016.

Local Mitigation Strategy Plan Update 2016-2021

Sheila Fitzgerald
Special Projects/Grants

Feb 8, 2016 BOCC Meeting

- The 2011-2016 Local Mitigation Strategy Plan has been updated and is being presented to the Board for approval to transmit to the State for review.
- This presentation will address the plan update process and next steps.
- Final approval and adoption of the Plan will come back to the Board prior to June.

Background

- Florida requires each county, its communities and other potential applicants for mitigation related funding to work together to develop and implement a Countywide Mitigation Plan.
- Local Mitigation planning forms the foundation for short-term and long-term post-disaster recovery and mitigation activities (funding).

Local Mitigation Strategy Task Force

Primary Purposes:

- Maintain & update LMS (plan)
- Identify risks
- Develop mitigation priorities to minimize risks
- Prioritize mitigation projects
- Assist the county and jurisdictions to identify funding & complete projects

• Cross-jurisdictional representation & coordination
• Community input
• Meetings are advertised and open to the public

Santa Rosa County LMS

The County's Mitigation Strategy is multi-hazard in focus and comprehensive in approach.

The four goals of the LMS Plan are:

1. **Become a More Disaster Resilient Community.**
2. **Minimize Coastal, Riverine, and Inland Flooding Losses throughout the County.**
3. **Minimize Storm Wind Losses throughout the County.**
4. **Minimize Wildfire Losses in the Forest / Urban Interface Areas.**

Santa Rosa County LMS

The County's Mitigation Strategy is multi-jurisdictional.

Participating entities are:

1. **Santa Rosa County including unincorporated areas**
2. **City of Gulf Breeze**
3. **City of Milton**
4. **Town of Jay**

Santa Rosa County LMS

- The 2011-2016 LMS Plan expires June 9, 2016
- Comprehensive Update to the Plan (2016-2021) will be submitted to Florida Division of Emergency Management no later than Feb 2016
- The plan must be approved by the State and FEMA so that we continue to be eligible for hazard mitigation funding

Planning Process

- Organize Resources
  - Coordination with other agencies
  - Involve the Public
  - Integration with other planning efforts
- Assess risks
  - Identification of and profiling all hazards
  - Assessing vulnerability
  - Estimating impacts/losses

Planning Process

- Development the mitigation plan
  - Document planning process
  - Develop hazard mitigation goals
  - Identify and prioritize mitigation actions
  - Review potential funding sources
- Implement plan and monitor progress
  - Implementation of projects
  - Monitor, evaluate and update the plan as needed
  - Continue to involve the public

Plan Update Information

- Efforts to update the current plan started in April 2015
- Public meetings were also held on April 28 & 30 in Tiger Point and in Milton
- LMS Task Force has met 1-2 times per month to accomplish the update

Changes to the Plan

- Overall document streamlined to eliminate redundancy and improve usefulness
- Plan goals revised to be more focused and action-oriented
- Hazard and vulnerability background data updated with current information
- Data updated to reflect disasters that have occurred since the last plan approval
- Changes to proposed mitigation actions and project list

Plan Contents

- Executive Summary (Section 1)
- Planning Process (Section 2)
  - LMS committee information
  - LMS meeting information
  - A description of the plan update process
  - Review and integration with existing plans

Plan Contents

- Hazard Identification and Risk Assessment (Section 3)
  - General information about Santa Rosa County
  - Hazards Analysis to include History, Probability, Vulnerability and Maximum Threat/Extent of:
    - Flooding
    - Severe Storms and Lighting
    - Tornadoes and Waterspouts
    - Wildfire
    - Heat Waves and Droughts
    - Winter Storms and Freezes
    - Erosion both Inland and Costal

Plan Contents

- Mitigation Strategy (Section 4)
  - Goals and Objectives
  - Specific Measures for:
    - Prevention
    - Property Protection
    - Public Education and Awareness
    - Natural Resource Protection
    - Structural Projects
  - Mitigation Initiatives (project listing with projects from each of the categories listed above)
- Plan Maintenance (Section 5)
  - How the plan will be maintained and evaluated

Flood Mitigation Plan (Appendix F)

- In 2009 the county developed its first Flood Mitigation Plan
- The Flood Mitigation Plan was updated concurrently with the update of the LMS with the assistance of the Flood Mitigation Plan Task Force
- The Flood Mitigation Plan is an appendix of the LMS Plan

Highlights of the Flood Mitigation Plan

- Plan is flood specific and provides greater level of detail for planning purposes
- Includes goals and action plan specific to flooding that guide efforts of staff and other stakeholders
- Includes a Plan for Public Information
- Has resulted in an improvement to the county's CRS rating
- Will improve flood mitigation grant efforts including increased grant funding and project implementation

Public Comment Period

- Initial Plan draft was made available on the county's website (www.santarosa.fl.gov/lms) for public review on December 31, 2015
- A public meeting was held in the Commissioner's Board Room on January 7, 2016 to solicit comments on the proposed plan.
- The meeting was advertised in the Navarre Press, Gulf Breeze News and Santa Rosa Press Gazette and a Press Release was distributed December 30, 2015
  - Articles were included in the Pensacola News Journal and Navarre Press and were shared on social media

Plan Update – What's next?

- Board approval is requested in order to transmit the plan to the Division of Emergency Management for review
- After changes and final edits are made, the plan will be submitted to the State no later than Feb, 2016
- The state will review and may request changes or additional information
- Upon approval of the State, FEMA will review
- Upon approval by State and FEMA, the plan will be adopted by the county and its jurisdictions

The Future

- After approval, implement the Local Mitigation Strategy Plan and monitor and evaluate activities and revise as necessary
- Continue to encourage community and organizational representatives to attend and actively participate
- Encourage homeowners to retrofit homes if they are in a risk area
- Continue to work with other partners in an effort to identify and secure potential funding sources for mitigation projects
- Continue providing annual updates on progress

Administrative Item 5

Santa Rosa County
Board of County Commissioners

Sheila Fitzgerald, Special Projects/Grants Director
6495 Caroline Street, Milton, FL. 32570-4978, Phone (850) 983-1848 / Fax (850) 983-1944

MEMORANDUM

TO: Tony Gomillion

FROM: Sheila Fitzgerald

DATE: February 3, 2016

SUBJECT: Settlers Colony Drainage Project – HMGP Grant Modification #1

RECOMMENDATION:

That the board approve and execute Modification #1 to the grant agreement for the Settlers Colony Drainage project. Primarily, the modification increases the approved grant budget by $30,400 to fund archeological monitoring services and an increase in grant/project management costs and also includes a change to the scope of work as detailed below.

BACKGROUND

Utilizing Hazard Mitigation Grant Program (HMGP) funding allocated to Santa Rosa County after the 2012 Tropical Storm Debby Disaster, the county submitted a grant application for stormwater/drainage improvements for the Settlers Colony neighborhood in Gulf Breeze. Phase I (design and permitting) was awarded in December 2013 and was completed in October 2014.

The grant agreement for Phase II Construction was approved by the Board on July 23, 2015. A request to modify the grant agreement was also made in July to remove a portion of the original scope of work extending from Venetian Way to the Grant Canal that was repaired as an emergency project after the 2014 flood and covered under the FEMA Public Assistance (PA) program. The modification also requested an increase to the total grant budget to cover archaeological monitoring, a requirement of the Phase II grant agreement. In addition, funds were requested to account for increased grant/project management fees incurred as a result of the grant scope of work changes related to the unforeseen emergency work as well as the difficult EHP review of the project by the Division of Emergency Management. Those efforts was not foreseeably anticipated when the original grant/project management budget was calculated.

The modification was recently approved by FEMA and the Division of Emergency Management and approves the requested changes including increased budget.

NEXT STEPS

Upon execution by the Chairman and the Division of Emergency Management, a budget amendment will be requested to reflect the additional grant revenue ($22,800) and related local match ($7,600). Construction is currently underway and is expected to be complete in the spring.

Contract Number: 16HM-6B-01-67-01-196

Project Number: 4068-08-A

MODIFICATION TO SUBGRANT AGREEMENT BETWEEN THE DIVISION OF EMERGENCY MANAGEMENT AND SANTA ROSA COUNTY

This Modification Number One is made and entered into by and between the State of Florida, Division of Emergency Management ("the Division"), and Santa Rosa County ("the Recipient") to modify Contract Number: 16HM-6B-01-67-01-196, dated August 24, 2015 ("the Agreement").

WHEREAS, the Division and the Recipient have entered into the Agreement, pursuant to which the Division has provided a subgrant to the Recipient under the Hazard Mitigation Grant Program of $300,191.00, in Federal Funds; and

WHEREAS, the Division and the Recipient desire to modify the Agreement; and

WHEREAS, the Division and the Recipient desire to modify the Budget by and Scope of Work by increasing the Federal funding by $22,800.00 under the Agreement.

NOW, THEREFORE, in consideration of the mutual promises of the parties contained herein, the parties agree as follows:

1. The Agreement is amended to increase the Federal Funding by $22,800.00, for the maximum amount payable under the Agreement to $322,991.00, (Three Hundred Twenty Two Thousand Nine Hundred Ninety One Dollars and No Cents).

2. The Budget and Scope of Work, Attachment A to the Agreement, are hereby modified as set forth in 1st Revised Attachment A to this Modification, a copy of which is attached hereto and incorporated herein by reference.

3. All provisions of the Agreement being modified and any attachments in conflict with this Modification shall be and are hereby changed to conform with this Modification, effective on the date of execution of this Modification by both parties.

4. All provisions not in conflict with this Modification remain in full force and effect, and are to be performed at the level specified in the Agreement.

IN WITNESS WHEREOF, the parties hereto have executed this Modification as of the dates set out below.

RECIPIENT: SANTA ROSA COUNTY

By:_____

Name and Title: Lane Lynchard, Chairman

Date: 02/11/2016

STATE OF FLORIDA
DIVISION OF EMERGENCY MANAGEMENT

By:_____

Name and Title: Bryan W. Koon, Director

Date: _____

1st Revised Attachment A

Budget and Scope of Work

STATEMENT OF PURPOSE:

The purpose of this Scope of Work (SOW) is to improve drainage to the Settlers Colony area in Gulf Breeze, Santa Rosa County, Florida; funded through the Hazard Mitigation Grant Program (HMGP) **DR-4068-8-R**, as approved by the Florida Division of Emergency Management (Division) and the Federal Emergency Management Agency (FEMA).

The Recipient, Santa Rosa County, agrees to administer and complete the project per sealed engineering designs and construction plans as submitted by the Recipient and subsequently approved by the Division and FEMA. The Recipient shall complete the work in accordance with all applicable Federal, State and Local Laws, Regulations and Codes.

PROJECT OVERVIEW:

As a Hazard Mitigation Grant Program project, the Recipient proposes to improve the drainage of the Settlers Colony area, located in Gulf Breeze, Santa Rosa County, Florida, 32563.

The Phase II – Construction scope of work proposes drainage improvements of the Settlers Colony Area. The proposed project shall include the concrete lining of an open FDOT ditch, the removal and upgrading of a 30-inch pipe system with 48-inch culverts between Settlers Colony Boulevard and Venetian Way, and the installation of additional pipe systems (i.e., inlets and pipes) along Settlers Colony Boulevard, between Settlers Landing and Settlers Way, designed to effectively convey excess waters into a man-made canal with a direct hydraulic connection to the Santa Rosa Sound.

The project shall provide protection against a 100-year storm event.

TASKS & DELIVERABLES:

A) Tasks

1) The Recipient shall procure the services of a qualified and licensed Florida contractor and execute a contract with the selected bidder to complete the scope of work as approved by the Division and FEMA. The Recipient shall select the qualified, licensed Florida contractor in accordance with the Recipient's procurement policy as well as all federal and state laws and regulations. All procurement activities shall contain sufficient source documentation and be in accordance with all applicable regulations.

   The Recipient shall be responsible for furnishing or contracting all labor, materials, equipment, tools, transportation and supervision and for performing all work per sealed engineering designs and construction plans presented to the Division by the Recipient and subsequently approved by the Division and FEMA.

   The Recipient and contractor shall be responsible for maintaining a safe and secure worksite for the duration of the work. The contractor shall maintain all work staging areas in

a neat and presentable condition.

The Recipient shall ensure that no contractors or subcontractors are debarred or suspended from participating in federally funded projects.

The selected contractor shall have a current and valid occupational license/business tax receipt issued for the type of services being performed.

The Recipient shall provide documentation demonstrating the results of the procurement process. This shall include a rationale for the method of procurement and selection of contract type, contractor selection and/or rejection and bid tabulation and listing, and the basis of contract price.

The Recipient shall provide an executed "Debarment, Suspension, Ineligibility, Voluntary Exclusion Form" for each contractor and/or subcontractor performing services under this agreement.

Executed contracts with contractors and/or subcontractors shall be provided to the Division by the Recipient.

The Recipient shall provide copies of professional licenses for contractors selected to perform services. The Recipient shall provide a copy of a current and valid occupational license or business tax receipt issued for the type of services to be performed by selected contractor.

2) The Recipient shall monitor and manage the installation to improve the drainage and provide flood protection

The project shall be implemented in accordance with sealed engineering designs and construction plans previously presented to the Division by the Recipient and subsequently approved by the Division and FEMA. The Recipient shall ensure that all applicable state, local and federal laws and regulations are followed and documented, as appropriate.

The project consists of the general construction and furnishing of all materials, equipment, labor and fees to minimize recurring flooding and reduce repetitive flood loss to structures and roadways.

The recipient shall fully perform the approved project, as described in the submitted documents, in accordance with the approved scope of work, budget line item, allocation of funds and applicable terms and conditions indicated herein. The recipient shall not deviate from the approved project terms and conditions.

Construction activities shall be completed by a qualified and licensed Florida contractor. All construction activities shall be monitored by a qualified engineer. The Recipient shall complete the project in accordance with all required permits. All work shall be completed in accordance with applicable codes and standards.

Upon completion of the work, the Recipient shall schedule and participate in a final inspection of the completed project by the local municipal or county official, or other approving official, as applicable. The official shall inspect and certify that all installation was in accordance with the manufacturer's specifications. Any deficiencies found during this final inspection shall be corrected by the Recipient prior to Recipient's submittal of the final inspection request to the Division.

Upon completion of Task 2, the Recipient shall submit the following documents with sufficient supporting documentation, and provide a summary of all contract scope of work and scope of work changes, if any. Additional documentation for closeout shall include:

a) Signed and Sealed As-built project plans (drawings) by the Professional of Record, two hard copies and electronic version (via email or CD); and

b) Letter of Completion:

   1. Affirming that the project was completed in conformance with the approved project drawings, specifications and scope; and

   2. Certifying Compliance with all applicable codes;

c) Letter stating if prehistoric or historic artifacts or human remains were discovered in project area during project activities, and if so, how they were handled.

d) Letter verifying if heavy equipment was staged on hard or firm surfaces.

e) Documentation verifying archeological monitor's qualifications.

f) Copy of archeological monitor's written report of all findings and conclusion. SHPO's acceptance of report must be attached.

g) Copy of the Self-Certification Statement of Compliance submitted to the USACE for NWPs #3 SAJ-2014-01892 and SAJ-2014-03157.

h) Verification of compliance with the Standard Protection Measures for the Eastern Indigo Snake dated August 12, 2013, to include:

   1. Photographs of the posters at the project site;

   2. Copy of the sign-in sheet of the meeting held pre-construction with all construction staff to discuss Eastern Indigo Snake identification, required actions after observation of snake, and penalties for non-compliance; and

   3. Copy of the monitoring report submitted to the USFWS Field office post-construction.

i) Proof of compliance with Project Requirements and Conditions contained herein.

3) During the course of this agreement the Recipient shall submit requests for reimbursement. Adequate and complete source documentation shall be submitted to support all costs (federal share and local share) related to the project. In some cases, all project activities may not be fully complete prior to requesting reimbursement of costs incurred in completion of this scope of work; however, a partial reimbursement may be requested.

   The Recipient shall submit an Affidavit signed by the Recipient's project personnel with each reimbursement request attesting to the completion of the work, disbursements or payments were made in accordance with all agreement and regulatory conditions, and that reimbursement is due and has not been previously requested.

   The Recipient shall maintain accurate time records. The Recipient shall ensure invoices are accurate and any contracted services were rendered within the terms and timelines of this agreement. All supporting documentation shall agree with the requested billing period. All costs submitted for reimbursement shall contain adequate source documentation which may include but not be limited to: cancelled checks, bank statements, Electronic Funds Transfer, paid bills and invoices, payrolls, time and attendance records, contract and subcontract

award documents.

Construction Expense: The Recipient shall pre-audit bills, invoices, and/or charges submitted by the contractors and subcontractors and pay the contractors and subcontractors for approved bills, invoices, and/or charges. Recipient shall ensure that all contractor/subcontractor bills, invoices, and/or charges are legitimate and clearly identify the activities being performed and associated costs.

Project Management Expenses: The recipient shall pre-audit source documentation such as payroll records, project time sheets, attendance logs, etc. Documentation shall be detailed information describing tasks performed, hours devoted to each task, and the hourly rate charged for each hour including enough information to calculate the hourly rates based on payroll records. Employee benefits shall be clearly shown.

The Division shall review all submitted requests for reimbursement for basic accuracy of information. Further, the Division shall ensure that no unauthorized work was completed prior to the approved project start date by verifying vendor and contractor invoices. The Division shall verify that reported costs were incurred in the performance of eligible work, that the approved work was completed, and that the mitigation measures are in compliance with the approved scope of work prior to processing any requests for reimbursement.

Review and approval of any third party in-kind services, if applicable, shall be conducted by the Division in coordination with the Recipient. Quarterly reports shall be submitted by the Recipient and received by the Division at the times provided in this agreement prior to the processing of any reimbursement.

The Recipient shall submit to the Division requests for reimbursement of actual construction and managerial costs related to the project as identified in the project application, sealed engineering designs, and construction plans. The requests for reimbursement shall include:

a) Contractor, subcontractor, and/or vendor invoices which clearly display dates of services performed, description of services performed, location of services performed, cost of services performed, name of service provider and any other pertinent information;

b) Proof of payment from the Recipient to the contractor, subcontractor, and/or vendor for invoiced services;

c) Clear identification of amount of costs being requested for reimbursement as well as costs being applied against the local match amount;

The Recipient's final request for reimbursement shall include the final construction project cost. Supporting documentation shall show that all contractors and subcontractors have been paid.

B) <u>Deliverables</u>

Mitigation activities consist of drainage improvements between Settlers Colony Boulevard and Venetian Way, Gulf Breeze, Florida. Additional drainage improvements will be made along Settlers Colony Boulevard designed to effectively convey excess waters into a man-made canal with a direct hydraulic connection to the Santa Rosa sound.

The completed project shall provide protection against a 100-year storm event.

Provided the Recipient performs in accordance with the Scope of Work outlined in this Agreement, the Division shall reimburse the Recipient based on the percentage of overall project completion.

PROJECT CONDITIONS AND REQUIREMENTS:

C) Engineering:

1) The Recipient shall submit to the Division an official letter stating that the project is 100% complete and ready for the Division's Final Inspection of the project.

2) The Recipient shall submit a signed and sealed final copy of the completed project's As-built drawings and all necessary supporting documentation, and provide a summary of all contract scope of work changes, if any.

3) The Recipient shall provide a copy of the Notice of commencement, and any local official Inspection Report and/or Final approval, as applicable.

4) The Recipient shall submit a certified letter of completion from Engineer of Record. The recipient's Engineer of Record shall provide a formal certificate or letter affirming that the project has been completed in conformance with the approved project drawings, specifications, scope, and applicable codes.

D) Environmental:

1) Recipient shall follow all applicable state, local and federal laws regulations and requirements, and obtain (before starting project work) and comply with all required permits and approvals. Failure to obtain all appropriate federal, state, and local environmental permits and clearances may jeopardize federal funding. If project work is delayed for a year or more after the date of the categorical exclusion (CATEX), then coordination with and project review by regulatory agencies shall be redone.

2) Any change, addition or supplement to the approved Scope of Work that alters the project (including other work not funded by FEMA, but done substantially at the same time), regardless of the budget implications, shall require re-submission of the application to FEMA through the Division for National Environmental Policy Act (NEPA) re-evaluation before starting project work.

   The Recipient shall monitor ground disturbing activities during construction, if prehistoric or historic artifact, such as pottery or ceramics, stone tools or metal implements, or any other physical remains that could be associated with Native American cultures, or early colonial or American settlement are encountered at any time within the project site area, the permitted project shall cease all activities involving subsurface disturbance in the immediate vicinity of such discoveries. The Recipient, or other designee, shall contact the Florida Department State, Division of Historical Resources, Review and Compliance Section at 850.245.6333 or 800.847.7278, as well as the FDEM. Project activities should not resume without verbal and/or written authorization for the Division of Historical Resources and the FDEM. In the event that unmarked human remains are encountered during permitted activities, all work shall stop immediately and the proper authorities notified in accordance with ***Florida Statutes, Section 872.05***.

3) The Recipient shall provide a qualified, professional archaeological monitor during all excavation activities of the undertaking for the purpose of ensuring that there are no unforeseen adverse effects to historic properties. The archaeological monitor shall provide a written report of all the findings following the conclusion of all ground disturbing activities.

The State Historic Preservation Officer (SHPO) must review the report and a copy of the report shall be provided to the FDEM at project close-out. FEMA will review the report and conduct any additional consultation as needed

4) Verification of compliance with USACE NWPs #3 SAJ-2014-01892, and SAJ-2014-03157 is required at closeout. Of note is "Special Conditions" 6.

    a) The Recipient shall follow the U.S. Fish and Wildlife Service (USFWS) "Standard Protection Measures for the Eastern Indigo Snake" dated August 12, 2013. These measures require notice to USFWS at least 30 days prior to start of work.

5) When heavy equipment is not in use, it shall be staged on hard or firm surfaces where equipment is not susceptible to sinking. Paved surfaces shall be used to the fullest extent possible.

6) Construction vehicles and equipment used for this project shall be maintained in good working order to minimize pollutant emissions.

7) Best management practices shall be used during project work to minimize soil erosion, sediment migration and turbidity with special focus on work in or around wetlands and other sensitive areas.

E. <u>Programmatic:</u>

1) A change in the scope of work *must* be approved by the Division and FEMA in advance regardless of the budget implications.

2) The Recipient must notify the Division as soon as significant developments becomes known, such as delays or adverse conditions that might raise costs or delay completion, or favorable conditions allowing lower costs or earlier completion.

3) The Recipient must "obtain prior written approval for any budget revision which would result in a need for additional funds" [44 CFR 13(c)], from the Division and FEMA.

4) Any extension of the Period of Performance shall be submitted to FEMA, 60 days prior to the expiration date. Therefore, any request for a Period of Performance Extension shall be in writing and submitted along with substantiation of new expiration date, and a new schedule of work, to the Division a minimum of seventy (70) days prior to the expiration date, for Division processing to FEMA.

5) The Recipient must avoid duplication of benefits between the HMGP and any other form of assistance, as required by Section 312 of the Stafford Act, and further clarification in 44 CFR 206.191.

6) If the Recipient is not the current title holder of the affected properties, the Recipients shall provide documentation confirming the property acquisition and easement rights were obtained voluntarily. If condemnation or eminent domain is used to obtain easement rights, FEMA shall not pay for any associated costs or payments to the property owner. Furthermore, FEMA shall not consider it an eligible contribution to the non-Federal cost share requirement and shall not financially participate in that component of a project if land or easements are obtained involuntarily.

This is FEMA Project Number **4068-8-R,** is funded under HMGP-4068-DR-FL.

The project was awarded by FEMA on ***June 9, 2015***; the Sub-grantee Agreement was executed on August 24, 2015; and the Period of Performance (POP) for this project shall end on ***December 31, 2016*.**

FINANCIAL CONSEQUENCES:

If the Recipient fails to comply with any term of the award, the Division shall take one or more of the following actions, as appropriate in the circumstances:

1) Temporarily withhold cash payments pending correction of the deficiency by the Recipient;
2) Disallow all or part of the cost of the activity or action not in compliance;
3) Wholly or partly suspend or terminate the current award for the Recipient's program;
4) Withhold further awards for the program; or
5) Take other remedies that may be legally available.

SCHEDULE OF WORK:

Phase II–

Construction Plan/Technical Specifications:	3	Months
Bidding:	3	Months
Construction :	9	Months
Weather Delays:	1	Months
Final Inspection/Closeout:	1	Months
Total Period of Performance:	**17**	**Months**

BUDGET:

Line Item Budget*

Phase II	**Project Costs**	**Federal Share**	**Local Share**
Construction:	$373,655.00	$280,241.00	$93,414.00
Construction Engineering and Inspection Services:	$20,000.00	$15,000.00	$5,000.00
Archaeological Monitoring Services	$25,000.00	$18,750.00	$6,250.00
Project Management:	$12,000.00	$9,000.00	$3,000.00
Total Project Costs:	**$430,655.00**	**$322,991.00**	**$107,664.00**

**Any line item amount in this Budget may be increased or decreased 10% or less without an amendment to this Agreement being required, so long as the overall amount of the funds obligated under this Agreement is not increased.*

Funding Summary

Federal Share:	$322,991.00	(75%)
Local Share:	$107,664.00	(25%)
Total Project Cost:**	**$430,655.00**	**(100.0%)**

Administrative Item 6

Santa Rosa County
Board of County Commissioners

Sheila Fitzgerald, Special Projects/Grants Director
6495 Caroline Street, Milton, FL. 32570-4978, Phone (850) 983-1848 / Fax (850) 983-1944

MEMORANDUM

TO: Tony Gomillion

FROM: Sheila Fitzgerald

DATE: February 4, 2016

SUBJECT: Settlers Colony Drainage – Possibility of Project Expansion

RECOMMENDATION:

That the board consider pursuing additional Hazard Mitigation Grant Program (HMGP) funding available as a result of DR 4068 (TS Debby) to expand or enhance the drainage project currently underway for Settlers Colony and the surrounding area. This may include authorization of up to $39,530 for engineering services necessary to secure funding.

BACKGROUND

On January 27, 2016, the Florida Division of Emergency Management (DEM) informed the county that additional HMGP funding was available to enhance or expand approved projects obligated from DR 4068 (TS Debby). Funding cannot be used for approved HMGP projects obligated in other disasters or for new projects. Although construction is currently underway for Settlers Colony, we can still propose additional enhancements to improve the drainage in the area, which if approved would occur following a formal design and permitting process. The existing construction project would not be delayed in any way related to this effort.

We are currently exploring several possible improvements in areas immediately adjacent to the existing construction area as well as in the neighborhoods to the south of Settlers Colony and to the west of Coronado Drive extending to the sound. Please refer to attached exhibit for reference. In order to secure funding for enhancements that we may propose, we must provide a complete re-scoped application or proposal for these funds no later than February 26, 2016. In order to meet this critical deadline, we have requested a proposal and fee schedule from Pegasus Engineering who can assist us with both the initial exploration as well as all tasks needed to develop a proposal for DEM's consideration. Pegasus has successfully secured HMGP funding for the county as well as provided invaluable grant and project management services since 2010.

The initial exploration work will begin with a detailed field review/site visit to inventory the existing drainage infrastructure, which is very limited. Other information, such as prior drainage and flooding impacts, will be carefully reviewed to determine a specific service area. Surveying and computer modeling will be used to determine the extent of the proposed improvements, scope of work and cost estimate. Further, a preliminary Benefit Cost Analysis (BCA) will be developed to ensure cost effectiveness, an HMGP requirement.

NEXT STEPS

As soon as practical, the Board will be provided with another update on this effort. Should the board wish to move forward with pursuing funding, staff will work closely with DEM and FEMA to ensure that funds are successful secured. If the proposed improvements meet with DEM and FEMA's approval, we would enter into a Phase I grant agreement to complete formal design, engineering and permitting. We would also be able to receive reimbursement for any preliminary efforts incurred during the current exploratory phase. We would also work as expeditiously as possible to ensure all project construction is complete no later than April, 2018 which is FEMA's deadline for expenditure of funding.

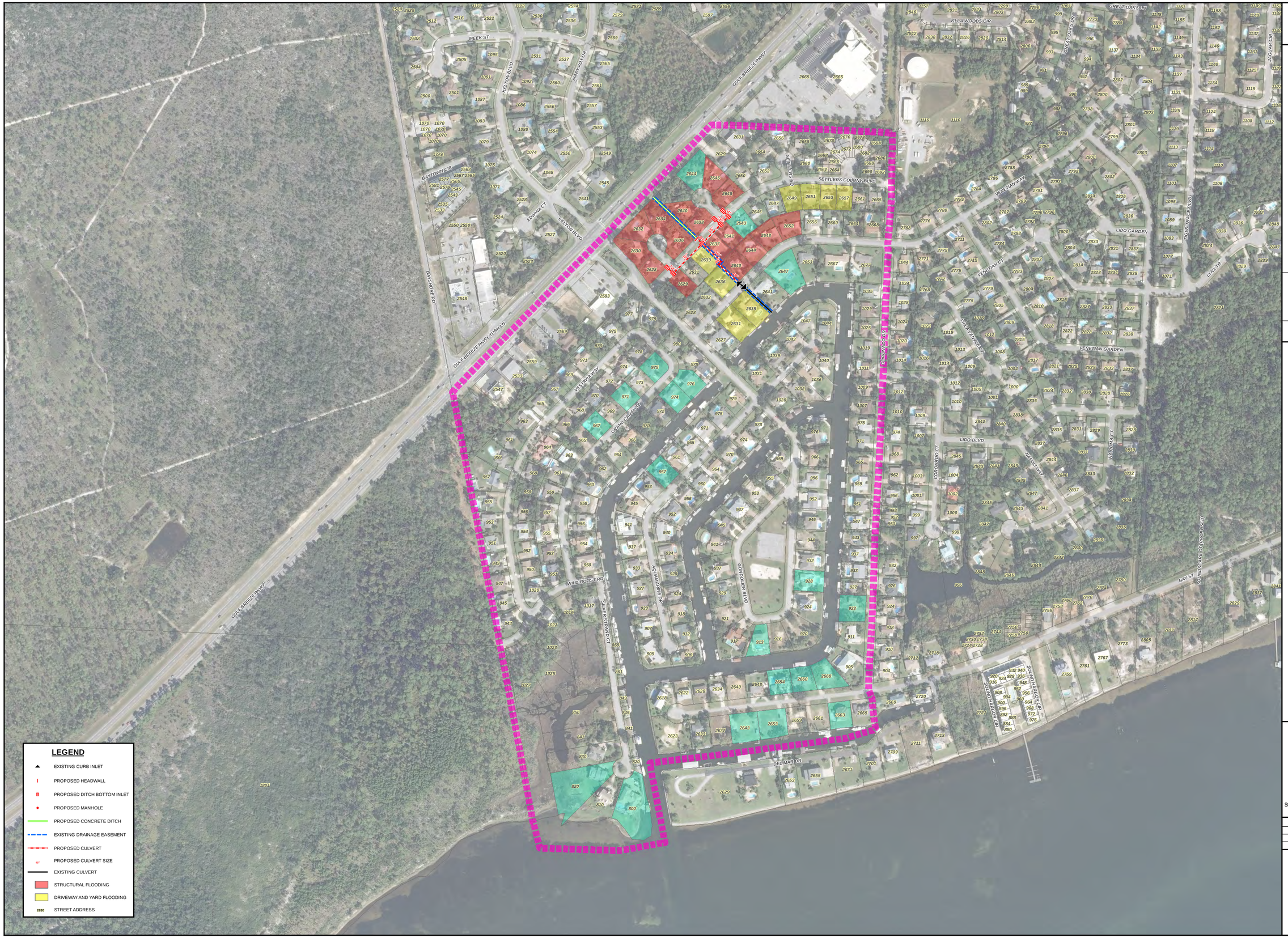

REV.	DATE	DESCRIPTION

SETTLERS COLONY DRAINAGE IMPROVEMENTS EXPANSION

SANTA ROSA COUNTY, FLORIDA

Pegasus Engineering, LLC
301 West SR 434, Suite 309
Winter Springs, Florida 32708

Office (407) 992-9160
Fax (407) 358-5155

State of Florida Board of Professional Engineers
Certificate of Authorization No. 27770

JOB NO.:	MK-03
DRAWN BY:	DCG
APPROVED BY:	LLS
DATE:	JANUARY 29, 2016

FIGURE

1

Pegasus ENGINEERING

February 8, 2016

Ms. Sheila A. Fitzgerald
Special Projects/Grants
Santa Rosa County Board of County Commissioners
6495 Caroline Street, Suite H
Milton, Florida 32570

Re: Settlers Colony Drainage Improvements Expansion
FEMA Hazard Mitigation Grant Program (HMGP) Application
Tropical Storm Debby (FEMA-4068-FL-DR)
HMGP Project No. 4068-008-R

Dear Ms. Fitzgerald:

Per the County's request, please find enclosed two (2) copies of the following information for your review and approval associated with the preparation of a FEMA Hazard Mitigation Grant Program (HMGP) application for submittal to the Florida Division of Emergency Management (DEM) in order to secure FEMA funding for the Settlers Colony Drainage Improvements Expansion:

- Exhibit "A" (Scope of Work); and
- Exhibit "B" (Manhour and Fee Estimate).

In late January 2016, the Florida Division of Emergency Management (DEM) informed Santa Rosa County of the existence of additional funding associated with Tropical Storm Debby that has the strong potential of being allocated to the expansion of the Settlers Colony Drainage Improvements project, a Tropical Storm Debby HMGP funded project, which is currently under construction. For this effort, the County is required to submit a complete HMGP application package to DEM demonstrating project cost effectiveness.

The engineering services to be provided by Pegasus Engineering under this proposal are intended to encompass a stormwater design to expand the original Settlers Colony Drainage Improvements scope of work in an effort to maximize flood protection benefits to nearby residential areas (e.g., Blue Heron Cove and Venetian Isles Subdivisions). As part of this proposal, a complete HMGP application package will be prepared and submitted to DEM for review and funding consideration on or before February 26, 2016.

Note that the fee associated with the engineering design of the project expansion that is being proposed herein is partially reimbursable. In other words, FEMA allows the County to include professional fees in the HMGP application which will be reimbursed to the County (at a 75% Federal share).

Our intent is to request that DEM structure the County's HMGP application for the Settlers Colony Drainage Improvements Expansion project in a two-phased approach. Specifically, Phase I will encompass engineering design, computer modeling, construction plans, cost estimates, and permitting while Phase II will include the project implementation (i.e., construction costs and construction inspection services). For planning purposes, please note that FEMA will most likely grant a one year timeframe to complete the Phase I services and one year for full project implementation under Phase II services, as construction efforts will need to be completed by April 2018.

We look forward to the opportunity to serve Santa Rosa County on this important assignment and to securing FEMA funds on behalf of the County to allow for the full implementation of this flood protection project, which will in turn provide much needed relief to many affected County residents.

Very truly yours,

PEGASUS ENGINEERING, LLC

David W. Hamstra, P.E., CFM
Principal / Stormwater Department Manager

cc: Leylah Saavedra, Pegasus Engineering
Pegasus Project File SRC-22002

Settlers Colony Drainage Improvements Expansion
FEMA Hazard Mitigation Grant Program (HMGP) Application
Tropical Storm Debby (FEMA-4068-FL-DR)
HMGP Project No. 4068-008-R

Approved for Pegasus Engineering, LLC

Fursan Munjed	Principal	February 8, 2016
Fursan Munjed, P.E.	Officer's Title	Date

This proposal is hereby accepted and authorization to proceed is hereby given
(Please return one executed copy of this proposal for our Pegasus Engineering records).

Authorized Signature	Officer's Title	Date

EXHIBIT "B"
Manhour and Fee Estimate

SETTLERS COLONY DRAINAGE IMPROVEMENTS EXPANSION
ENGINEERING SERVICES TO PURSUE ADDITIONAL GRANT FUNDING
Santa Rosa County, Florida

Task Description (Effective: February 3, 2016)	Sr. Project Manager (Hamstra, P.E.)	Sr. Project Engineer (Saavedra, P.E.)	AutoCAD / GIS Technician (Birkhead)	Administrative Assistant (Villanueva)	Task Hours	Task Fees
Standard Hourly Rates	$180.00	$165.00	$80.00	$65.00		
Prepare for and Conduct a Detailed Field Review	12	0	2	0	14	$2,320.00
Coordinate with County staff regarding documented historical losses	0	2	0	0	2	$330.00
Prepare a Preliminary Drainage Basin and Problem Area Exhibit	0	4	16	0	20	$1,940.00
Design and Layout the Preliminary Recommended Drainage Improvements	2	4	12	0	18	$1,980.00
Prepare a Construction Cost Estimate	2	8	0	0	10	$1,680.00
Prepared and Submit a Letter Report	2	8	0	1	11	$1,745.00
Delineate the Drainage Sub-Basins and Compute Hydrologic Parameters	0	12	16	0	28	$3,260.00
Prepared a survey scope for the County surveyor	2	0	2	0	4	$520.00
Prepare the Existing and Proposed Conditions Computer Models	4	32	8	0	44	$6,640.00
Prepare/Assemble the Hydrologic and Hydraulic (H&H) study	2	8	2	2	14	$1,970.00
Coordinate with County Staff to obtain all supporting BCA documentation	0	12	0	4	16	$2,240.00
Addressed the required information associated with the Environmental Review Criteria	0	6	4	0	10	$1,310.00
Address the required information associated with the Tribal Consultation requirements	0	4	2	0	6	$820.00
Prepare the HMGP Application (including drainage analysis and worksheets)	0	32	0	0	32	$5,280.00
Prepare the Historic Damage Quantification Analysis and the Benefit Cost Analysis	0	16	0	0	16	$2,640.00
Prepare Supporting Photographs, Figures and Exhibits for submittal to FEMA	0	2	4	0	6	$650.00
Prepare and Submit the HMGP Application Package to DEM (in digital format)	0	4	0	2	6	$790.00
Coordinated with the County surveyor regarding survey work products	0	2	0	0	2	$330.00
Address one (1) round of RFI (Request for Information) Comments from DEM	0	8	0	1	9	$1,385.00
Status Reports via Monthly Invoices, Project Administration and Review of Work Products	8	0	0	4	12	$1,700.00
TASK HOURS	34	164	68	14	280	
TASK LABOR COSTS	$6,120.00	$27,060.00	$5,440.00	$910.00	$39,530.00	**$39,530.00**
PERCENT BREAKDOWN	15.5%	68.5%	13.8%	2.3%	100.0%	
					FEMA Match (75%):	**$29,647.50**
					Local Match (25%):	**$9,882.50**

Pegasus ENGINEERING

Administrative Item 7

BIBLE WAY BAPTIST CHURCH

William B. Wright
Pastor

Mailing Address: P.O. Box 812 · Milton, FL. 32572
Physical Address: 5976 Dogwood Drive · Milton, FL 32570
(850) 981-0560 · e-mail: pastor @biblewaybaptistministries.com

† AV 1611
† FUNDAMENTAL
† BIBLE-BELIEVING
† INDEPENDENT
† MISSIONS-MINDED

† BIBLE WAY PRESS
†www.biblewaybaptist ministries.com

January 28th, 2014

Santa Rosa County
Board of County Commissioners

RE: Annual Day of Prayer Observance

Dear Sirs:

On behalf of the Coordinating Committee for the annual "National Day of Prayer" in Santa Rosa County, I respectively request that concerned citizens of our county be given permission to again gather on the lawn of the County Court House on Thursday, May 5, 2016, from 12:00 noon to 12:35 P.M. for a public observance of the National Day of Prayer.

In case of inclement weather, we again request permission to use one of the courtrooms in the Court House.

Thank you in advance for your continued cooperation and support in this matter.

Yours in Christ,

W. Charles Miller

Administrative Item 8

your running and walking specialists

January 28, 2016

Tony Gomillion
County Administrator
Santa Rosa County, Fl

Dear Sir;

I am the race director for the Navarre Sunset Stampede 5K, the largest race on Navarre Beach. This year will be our 8th annual event and takes place on Saturday, May 7, at 6:30pm. I am requesting approval from the county for our 2016 event.

The starting line will be on Gulf Blvd. and the finish line is in the public boat launch. I have attached a course map for your convenience. Last year we had over 600 participants and are expecting about the same number this year.

We will have General Liability insurance with a minimum coverage of $300,000 listing Santa Rosa County as additional insured. This will be delivered to The County at least 2 weeks prior to the event. We will have Santa Rosa County Sheriff's on hand for the event as well as CERT.

In past years we have used the first row of parking spaces on the south end of the public boat launch for packet pick up. That would be our first choice but if that is not possible we could use the parking spaces on the north side of the pier parking lot adjacent to the start line. I have attached diagrams of both possibilities.

If you have any additional questions or concerns please do not hesitate to call me. Thank you for your consideration.

Sincerely,

Jeff Harris
runwithitfl@gmail.com
850-243-1007

NAVARRE BEACH SUNSET STAMPEDE 5K – 2010 – MAP NOT TO SCALE

N

START – 90' E OF SW ENTRANCE, PARKING LOT OF BOAT RAMP, SOUNDSIDE PARK, 8572 GULF BLVD.

1 – 3' W OF CENTER OF CONDOMINIUM, 8228 GULF BLVD.

TURN-AROUND – W EDGE OF DRIVEWAY 8031 WHITE SANDS BLVD.

2 – 6'E OF STOP SIGN, INTERSECTION ARKANSAS ST & WHITE SANDS BLVD.

3 – 14' E STOP SIGN, ENTRY/EXIT TO BOAT RAMP, GULF BLVD.

FINISH – (NW EDGE OF PARKING SPACE) 324' E OF SW ENTRANCE TO BOAT RAMP, SOUNDSIDE PARK, 8572 GULF BLVD.

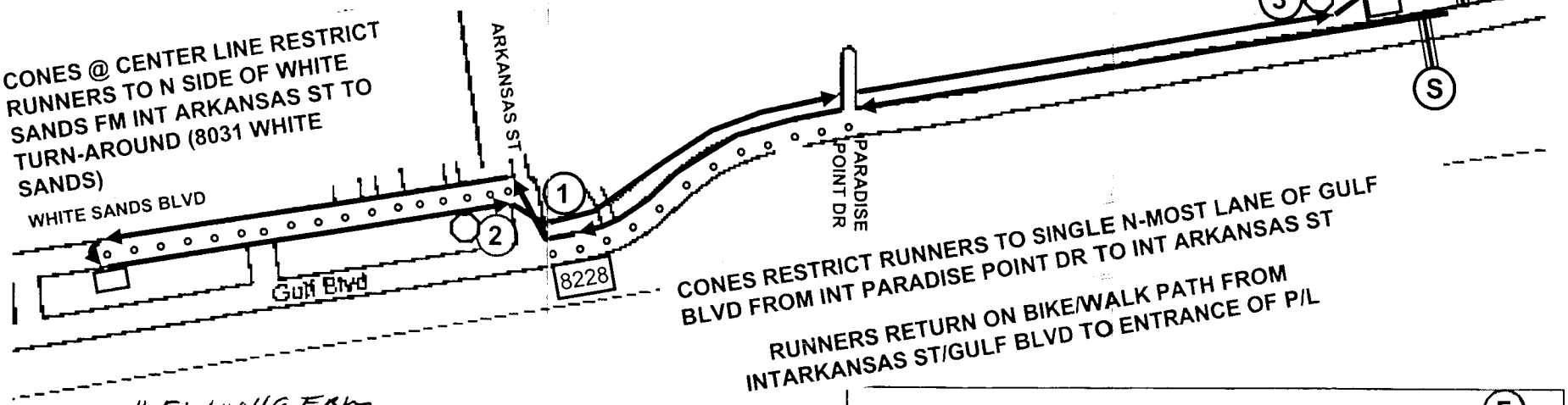

#FL10049 EBm
Effective 4/26/2010
to 12/31/2020

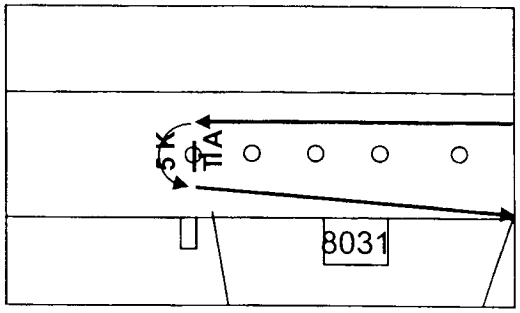

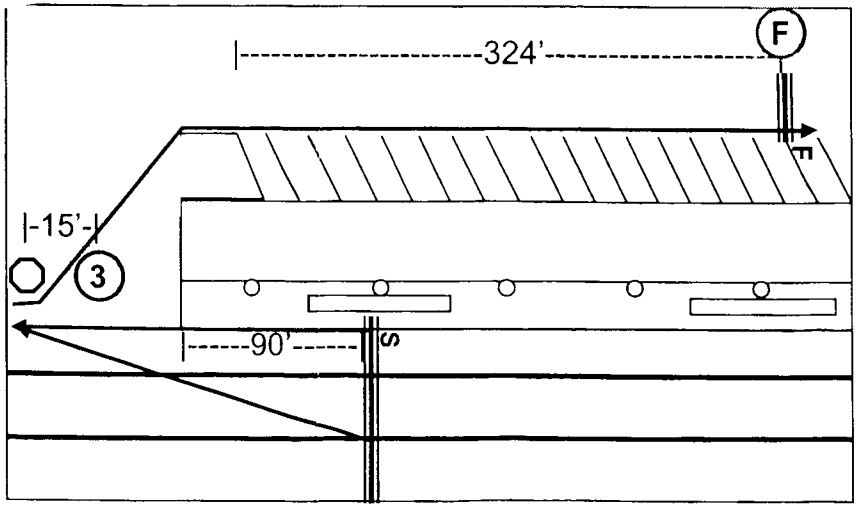

RESERVED FOR FINISH LINE/TIMING
RESERVED FOR REGISTRATION/START ACTIVITIES
Gulf Blvd
Gulf Blvd
Gulf Blvd
Gulf Blvd
399
399
399
399
Google
Imagery ©2013 Google, Map data ©2013 Google
Terms
Privacy
Report a

Google Maps

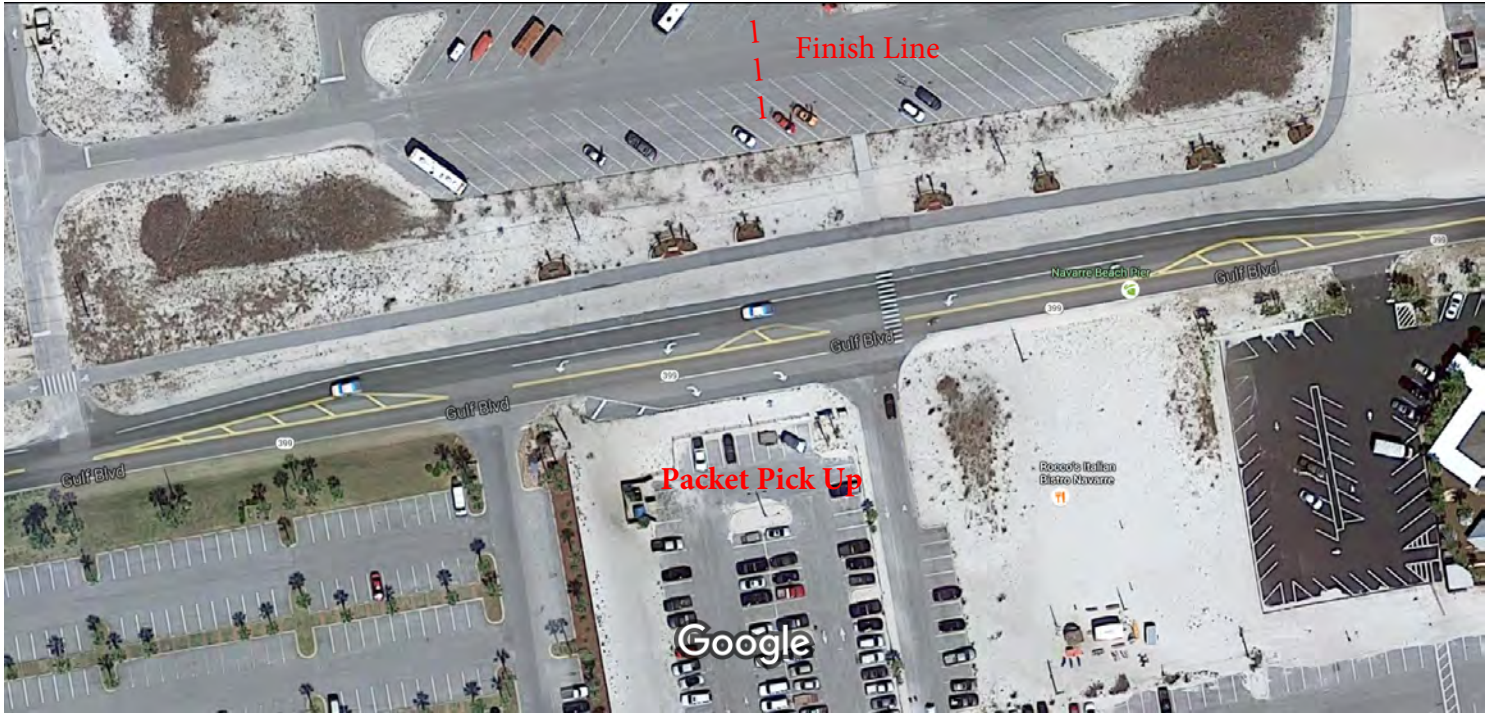

Imagery ©2016 Google, Map data ©2016 Google 50 ft

Administrative Item 9

ST SYLVESTER CATHOLIC CHURCH
6464 Gulf Breeze Parkway
Gulf Breeze, FL 32563

January 25, 2016
County Administrator
6495 Caroline Street
Suite D
Milton, FL 32570

Dear County Administrator,

Our 2015 Annual Flag Day 5K Run Walk was a huge success! We would like to do it again with your permission. This letter is requesting permission to use county roads again for a Flag Day 5k Run Walk. The Columbiettes and Knights of Columbus Organizations of Saint Sylvester Catholic Church are hoping to schedule the annual Flag Day 5K Run Walk on June 11, 2016 from 7:30am-11:30am. The planned route for the race will be: Start at back parking lot of church, go left onto Sundown, right onto Marlin, right onto Sparrow, right onto Water, right onto Eagle, left onto Perch, left onto Cardinal, right onto Water, right onto Sundown and left into church parking lot.

The Columbiettes and Knights are the Catholic women and men's organizations of the church. These two organizations will use the profits again to support local charities to be chosen at a later date.

We look forward to hearing from you. Thank you for this consideration.

Saint Sylvester Catholic Church
6464 Gulf Breeze Pkwy
Gulf Breeze, Fl 32563
850-939-3020
FAX 850-936-5366

Ellen Stanley
Past President
Columbiette Auxiliary 13277
Race Coordinator

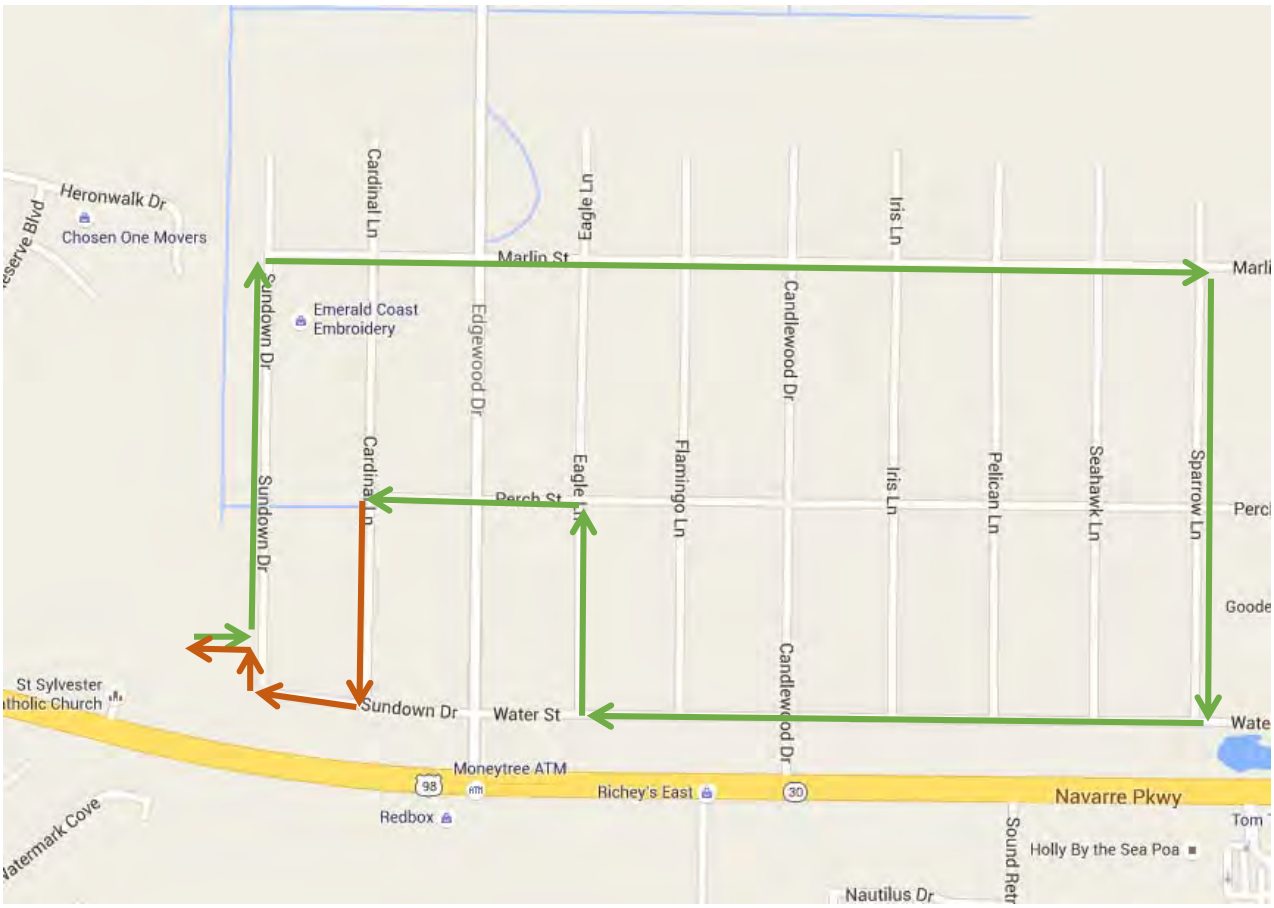
Heronwalk Dr
Chosen One Movers
Cardinal Ln
Eagle Ln
Iris Ln
Marlin St
Emerald Coast Embroidery
Sundown Dr
Edgewood Dr
Candlewood Dr
Cardinal Ln
Eagle Ln
Flamingo Ln
Iris Ln
Pelican Ln
Seahawk Ln
Sparrow Ln
Perch St
Sundown Dr
St Sylvester
Sundown Dr
Water St
Candlewood Dr
Moneytree ATM
98
Richey's East
30
Navarre Pkwy
Redbox
Holly By the Sea Poa
Nautilus Dr

Administrative Item 10

From: micheletucker@bellsouth.net [mailto:micheletucker21@gmail.com]
Sent: Friday, January 22, 2016 8:01 AM
To: Commissioner Rob Williamson <RobWilliamson@santarosa.fl.gov>; Tony Gomillion <TonyG@santarosa.fl.gov>
Subject: Fwd: RememberingBlackHawk11.pptx

Good Morning Commissioner,

Good Morning Tony,

Last August, Nathan Harris, a marine from the 2nd Raider Battalion, met with Hunter Walker to discuss plans for a memorial event on the anniversary of the Black Hawk Training Accident. At that time, Hunter extended his full support and asked us to come back before the Board of County Commissioners with a full presentation. "Remembering Black Hawk 11" is the name for the event commemorating the one year anniversary.

Also as part of the events, a "Marine Raider Memorial March" is planned to leave Navarre on the morning of March 11. The organizers of the Ruck March and the memorial event have been working diligently to prepare for the events and have secured sponsorships, lodging and meals for the families during the time they are here.

As a representative for each of the groups, I would like to ask that the Board of County Commissioners approve our request to hold the memorial event in the Navarre Beach Marine Park, on March 10, 2016 from 3:00 pm to 9:00 pm. We also ask for the approval of the Ruckers to ceremoniously begin their memorial march by leaving from the event and rucking across the Navarre Beach Bridge. We have been in touch with the Sheriff's office who is willing to help us with the traffic flow that evening over the bridge. Attached for your review is a PowerPoint outlining the planned events.

Please let me know if you have any questions or need additional information. Thank you for your support of these events.

Warmest Regards,
Michele Tucker, CRS, GRI, RSPS
CENTURY 21 Island View Realty
850-582-1707, cell

Florida has a very broad Public Records Law. Virtually all written communications to or from Santa Rosa County Personnel are public records available to the public and media upon request. E-mail sent or received on the county system will be considered public and will only be withheld from disclosure if deemed confidential pursuant to State Law.

Administrative Item 11

Santa Rosa County
Development Services

Beckie Cato, AICP
Planning and Zoning Director

Rhonda C. Royals
Building Official

MEMORANDUM

TO: Board of County Commissioners

FROM: Beckie Cato, Planning Director

THROUGH: Tony Gomillion, County Administrator

DATE: January 2, 2016

RE: CrossFit Navarre Special Event Application

RECOMMENDATION:

That the Board consider approval of Special Event Permit Application from Steve Philpot with CrossFit Navarre to conduct a fitness competition at the Navarre Pier parking lot on May 7 and 8, 2016.

BACKGROUND:

This will be the County's first application processed according to the recently adopted Special Events Ordinance. The proposed event is a fitness competition with an anticipated attendance of 250 to 300 people. Proceeds from the event will benefit the Navarre Beach Fire Department and the Navarre Beach Pier.

Note that the newly-developed Special Events Application has a section for requesting variances (page 7). The applicant is asking to utilize county property for the event which is a variance to county code which only allows the reservation of pavilions. In addition, because the applicant is a commercial business and not a non-profit organization, variance to county code which only allows commercial use of county property by non-profit organizations is requested. County code related to park regulations is the topic of a separate agenda item.

NEXT STEPS:

If approved by the Board, staff will work with Mr. Philpot to finalize arrangements for the event, including submittal of required insurance certificate and coordination with Navarre Beach Office regarding cleanup procedures.

Santa Rosa County Board of County Commissioners • Tourism Development Office
8543 Navarre Parkway • Navarre, FL 32566
Phone: (850) 981-8900 Fax: (850) 981-8903
tdo@santarosa.fl.gov

Special Event Permit Application

Instructions: To process an application, all pages must be filled out completely and submitted with payment. You may obtain department approvals by phone, email, or in person. For questions about requirements, fees, or the application process contact the Tourism Development Office.

EVENT INFORMATION (PLEASE CHECK ALL THAT APPLY)

☐ CONCERT ☐ PARK FESTIVAL ☐ SALE/MARKET ☐ RUN/WALK ⊘ FUNDRAISER

☐ PARADE/PROCESSION ⊘ SPORTS EVENT ☐ FISHING EVENT ☐ PRIVATE EVENT ⊘ PUBLIC EVENT

☐ OTHER _____

Event Name: Navarre Beach WODFest – CrossFit Navarre

Event Location: Navarre Beach Pier Parking Lot Date(s) of Event: May 7 to May 8, 2016

Time of Event: Day 1 6 a.m. to 5 p.m. Day 2 6 a.m. to 6 p.m. Day 3 _____ to _____

Set Up Date : May 6 Set Up Time: 6 p.m. Breakdown Date: May 8 Breakdown Time: 6 p.m.

Will an admission fee be charged? ⊘ YES ☐ NO Admission Fee: undetermined at this time

Estimated Attendance: 250 - 300 /per day

Brief description of event: The event is a two day fitness competition. A percentage of all our proceeds raised for this event will go toward our local Navarre Beach Fire Department and Navarre Beach Pier.

APPLICANT & EVENT ORGANIZER INFORMATION

☐ INDIVIDUAL ☐ NOT-FOR PROFIT ⊘ FOR PROFIT ☐ CHARITY ☐ CHURCH ☐ OTHER

Name of Organization: CrossFit Navarre

Address: 2209 Hwy 87 S. City: Navarre State: FL Zip: 32566

Phone: 850-384-3542 Email: Steve_Philpot@hotmail.com

Point of Contact: Steve Philpot, Owner

Special Event Questions

Below are questions about the event. Please answer all questions and attach additional documents, if necessary, to the application.

Note: If your event will attract less than 1,000 people per day, will not require reservation of county property other than a pavilion, community center, or auditorium, and will not involve the sale or consumption of alcohol, this Special Events Permit is not required. Applications to reserve the facilities described above can be found online at _____.

Do any of the following apply to your event? Check all that apply.
☐ Attendance of 1000+ people per day on public or private property? *Agritourism events on private property do not require this application.*
⦸Event located on public property or a county park?
☐ Alcohol use on county property?
☐ Alcohol use on public or private property at times or locations not otherwise allowed by county ordinance?

If the answer to any of the above is yes, your application must be approved by the Board of County Commissioners at a public meeting.

Does your event require the use of:
⦸ County park pavilion? If yes, a _____ application or approval must be attached.
☐ County-owned community center? If yes, a _____ application or approval must be attached.
☐ County Auditorium? If yes, a _____application or approval must be attached.

Will restroom facilities be available on site? If yes, describe 2 – 3 units depending on number of athletes that sign up	⦸ YES	☐ NO
Will there be amplified sound? If yes, times requested 9 a.m. to 6 p.m.	⦸ YES	☐ NO
Will food or non/alcoholic beverages be sold or given away?	☐ YES	⦸ NO
Will food be cooked at the event?	☐ YES	⦸ NO
Will an admission fee be charged?	⦸ YES	☐ NO
Will alcohol be sold or given away? If yes, attach liquor liability insurance.	☐ YES	⦸ NO
Will there be fireworks? If yes, a pyrotechnics plan must be attached.	☐ YES	⦸NO
Will unimproved or off-site lots be used for parking? If yes, a parking plan must be attached.	☐ YES	⦸NO
Will a county park be utilized? If yes, attach park rental agreement.	⦸ YES	☐ NO
Will vendors be selling merchandise, food, or wares? If yes, attach vendor information form.	⦸ YES	☐ NO
Will tents larger than 400 sq. ft. or multiple tents be erected? If yes, attach tent permit.	☐ YES	⦸ NO
Will an EMT be on site?	⦸ YES	☐ NO
Will stages be erected?	☐ YES	⦸ NO
Will your event be using State Roads? If yes, an MOT is required 60 days prior to your event.	☐ YES	⦸ NO
Will you be submitting a local event/marketing grant application for your event? If so, contact Nicole Dees at NicoleD@santarosa.fl.gov	☐ YES	⦸ NO

Additional Required Documents

Below are documents that are required to be submitted with the application. Applications will be considered incomplete without these documents. For additional information about these documents please contact the special event office.

⦸ **Event Site Map or Race Route Map:** Event organizers must provide a **site map** with vendor locations, porta potties, run/walk route, etc.

☐ **Insurance Certificate** ☐ **FL Division of Corp Annual Report** ☐ **Tent Permit**

☐ **Tax Exempt Certificate and/or 501(c)3 Documentation if the entity is claiming tax exempt and/or non-profit status.**

Notes: Insurance certificate will be provided to Risk Management Office at least 15 days prior to event.
New corporation – no annual report filed yet. FDS web info attached.

County Approval Form

Event organizers must receive approval from applicable departments below. Read the field of expertise to determine which applies to the event. When emailing staff please copy the special events coordinator assigned to the event.

Department & Representative	Contact Information	Field of Expertise	Contact Method	Approval Received
Sheriff's Office Sergeant Rich Aloy RAloy@SRSO.net Cell (850)-485-7084	5755 East Milton Rd Milton, FL 32583 Office 850-983-1225	Street Closures; Traffic & Safety Plans; Event Site Maps; Parade Routes; Run/Walk/Bicycle Routes; Security	☐ EMAIL ⊘ PHONE ☐ IN PERSON	Jan / ? Month Day
Emergency Management Tom Lloyd, Operations Chief TomL@santarosa.fl.gov Cell 850-698-7401	4499 Pine Forest Rd Milton, FL 32583 Office 850-983-4608	Fire Lane; Fire Truck; Outdoor Cooking / Grilling; Flame Activities; EMT Requirements	☐ EMAIL ⊘ PHONE ☐ IN PERSON	Jan / 27 Month Day
Tourist Development Office Nicole Dees NicoleD@santarosa.fl.gov	8543 Navarre Pkwy. Navarre, FL 32566 Office 850-981-8900 Fax 850-981-8903	Tourism promotion	☐ EMAIL ☐ PHONE ☐ IN PERSON	Not applicable
Risk Management Melissa Lloyd, Risk Manager melissal@santarosa.fl.gov	6495 Caroline Street, Suite I Milton, FL 32570 Office 850-983-1863	Insurance Requirements; Alcohol Insurance; Live Animal Insurance; Liability Risks	☐ EMAIL ⊘ PHONE ☐ IN PERSON	Insurance certificate to be provided 15 days in advance of event
Development Services Tambre Lee or Amber Aaron tambrel@santarosa.fl.gov ambera@santarosa.fl.gov	6051 Old Bagdad Hwy. Milton, FL 32583 Office 850-981-7000	Permits for Large Tents, Stages & Platforms	☐ EMAIL ☐ PHONE ☐ IN PERSON	Not applicable
Parks Tammy Simmons tammys@santarosa.fl.gov	6075 Old Bagdad Hwy. Milton, FL 32583 850-983-1858 Phone 850-623-1331 Fax	Park Rentals	☐ EMAIL ☐ PHONE ☐ IN PERSON	Not applicable
Navarre Beach Sonya Lusk navarre-beach@santarosa.fl.gov	1411 Utility Dr. Navarre, FL 32561	Navarre Beach park and pavilion rentals	☐ EMAIL ☐ PHONE ⊘ IN PERSON	Jan / 27 Month Day
Health Department Herman Davies, Environmental Supervisor II herman.davies@flhealth.gov	P.O. Box 929 Milton, FL 32570 850-983-5200 x318 Fax: 850-983-5278	Portable toilet requirements	☐ EMAIL ☐ PHONE ☐ IN PERSON	Not required

I am aware of the rules and regulations as they pertain to special events and agree to abide by these rules and regulations. I understand that the event must adhere to all Santa Rosa County ordinances. I am duly authorized by the organization to submit this application on its behalf and agree to be financially responsible for any fees and costs that may be incurred by or on behalf of the event in Santa Rosa County. I certify that the information that I have provided on this application is true and to best of my knowledge. If the event details change, I agree to submit a revised application or provide additional information in writing at least 10 days prior to the event.

Name (please print): Steve Philpot

Signature: _____ Date: 2 Feb 2016

HOLD HARMLESS AGREEMENT

For and in consideration of having been granted permission by Santa Rosa County to hold a Special Event within the Santa Rosa County limits, the undersigned hereby agrees on behalf of the organization, to indemnify and hold harmless the county of Santa Rosa, its subsidiaries or affiliates, elected and appointed officials, employees, volunteers, representatives and agents from any and all claims, suits, actions, damages, liability and expenses in conjunction with loss of life, bodily injury or personal injury, or property damage, including loss of use thereof, directly or indirectly caused by, resulting from, arising out of or occurring in connection with this permitted activity.

The undersigned also agrees to protect and hold harmless the county of Santa Rosa, its subsidiaries or affiliates, elected and appointed officials, employees, volunteers, representatives and agents from any and all claims, suits, actions, damages, liability and expenses, present, past or future which may be asserted by this organization, or any member of this organization, or any participant of third party arising out of or occurring in connection with this permitted event.

By the signature to this document the undersigned acknowledges that it understands the contents of this document and is voluntarily agreeing to its terms.

In witness whereof I have here unto set my hand and seal this _____day of _____in 20____.

Name of Special Event Navarre Beach WODFest

Date(s) of Special Event May 7 and 8, 2016

_____	CrossFit Navarre
Notary Signature	Name of Organization
	Steve Philpot, Owner
	Printed Name
	_____
	Signature of Legally Authorized Representative
(STAMP)	_____
	Title

OUTDOOR CLEAN-UP FORM

It is understood that clean-up will be performed immediately following the event. Clean-up includes but is not limited to the removal of all garbage, signs, banners, tents, and traffic control devices (i.e. cones, barrels, signs, barricades, and changeable message signs) from the event area, public right-of-way, and/or county property.

Event Name: Navarre Beach WODFest

Date(s) of Event: May 7 – 8, 2016

Event Location: Navarre Beach Pier Parking Lot

Method of Clean Up: ⦸ Self Clean Up ☐ Volunteers (describe)

Will coordinate with Navarre Beach Office for specific direction.

If performing self clean up or using volunteers contact information must be provided for the person in charge of overseeing the clean up.

Contact Name: Steve Philpot

Contact Phone Number: (850) 384-3542

Steve Philpot
Printed Name

Signature—Responsible Party

2 Feb 2016
Date

Please Read and Initial Below - Park Rental Rules and Guidelines

Initial

SPH User agrees to provide full cleanup and accomplish reasonable cleanup of the rented park area utilized. This cleanup operation shall be completed by 12:00 noon on the day following the event unless another event is scheduled in the park (then cleanup must be completed directly following User's event). If trash receptacles provided by the county are full, User agrees to dispose of refuse/trash. If the User fails to remove all trash/refuse from the event site, the User will be billed for all fees incurred Santa Rosa County to remove said trash/refuse from the site.

SPH User shall be liable for any and all damage done to the property covered by this agreement located in and on the rented park area, regardless of who causes such damage or how such damage is caused, during the period of use contained in this agreement. Further, User shall agree to defend, indemnify and hold-harmless the county, its officials, employees, and representatives for any and all claims caused by or arising out of, in whole or in part, the activities permitted by this agreement.

SPH I hereby attest that the information contained in this contract is true and correct. I agree: (1) if any of the information contained in the contract is found to be false; or (2) should my conduct, or the conduct of any participants or guests not be described in the contract; or (3) should any applicable county, state or federal rules, regulations, codes or laws be violated, this contract shall automatically become null and void and any activity associated with this reservation will immediately cease. If the event has not taken place, the contract will be cancelled.

Print Name	Steve Philpot
Sign Name	
Date	2 Feb 2016

Additional Documents from Applicant

If this park is being rented by a tax exempt or non-profit organizations the following documents must be submitted with this application.

501(c)3 Documentation ☐ YES ⦸ NO - Tax Exempt Certificate ☐ YES ⦸ NO

Questions

Will tents larger than 400 sq. ft. or multiple tents be erected at event? ☐ YES ⦸ NO - Will stages be erected at event? ☐ YES ⦸ NO - Will animals/pets be allowed at event? ☐ YES ⦸ NO - Will alcoholic beverages be sold or given away at event? ☐ YES ⦸ NO - Will food or beverages be sold or given away at event? ☐ YES ⦸NO - Will there be amplified sound? ⦸ YES ☐ NO - Will food be cooked at the event? ☐ YES ⦸ NO - Will you require use of utilities on-site (water, electricity)? ☐ YES ⦸ NO - Which? ☐ WATER ☐ ELECTRICITY

Provide additional information for all YES answers marked on this agreement.

Modest amplified sound in the event area only

OFFICE USE ONLY

Agreement Received - Date: _____

Fee Paid - ☐ YES ☐ NO ☐ CASH ☐ CHECK ☐ CHARGE Amount: _____ Receipt #: _____

Additional Documents Received (if applicable) ☐ 501(C)3 ☐ TAX EXEMPT CERTIFICATE ☐ INSURANCE CERTIFICATE ☐ TENT PERMIT ☐ SPECIAL EVENT PERMIT APPLICATION ☐ OFFSITE PARKING PLAN

County Representative Signature: _____ Date: _____

Santa Rosa County Board of County Commissioners • Tourism Development Office
8543 Navarre Parkway • Navarre, FL 32566
Phone: (850) 981-8900 Fax: (850) 981-8903

tdo@santarosa.fl.gov

VARIANCE REQUESTED INFORMATION

It is understood that by requesting this variance of the special regulation(s) in regards to the county parks and/or County Code, the above named person(s)/organization has assured Santa Rosa County that if by receiving approval of the variance any and all damage that may occur as a result of this request will be repaired and invoiced to the Organizer of the activity held in the county park. This repair must be paid prior to any future approved park rentals. An inspection will be performed immediately following the event to determine if the variance approval that has been granted created the opportunity for damage and if any damage to any county property has occurred.

Variance Requested: Reservation of County property – variance to county code Section 15-28(a) which allows only the reservation of pavilions; commercial use of county park – variance to county code Section 15-40 which only allows commercial use by non-profits with authorization from the county.

OFFICE USE ONLY

Variance Approved ☐ YES ☐ NO

To Be Used with Special Event Permit: _____

Signature: _____ Date: _____

VENDOR INFORMATION

List all food and/or beverage vendors who will be participating in the event. Mark the type of vendor they are. If they will be providing both food and beverage services mark both. Outdoor cooking is considered any cooking done out in the open and not in a concession vehicle.

Vendor Type	Business Name	Contact Person	Phone Number	Outdoor Cooking
☐ Food ☐ Beverage				☐ Yes ☐ No
☐ Food ☐ Beverage				☐ Yes ☐ No
☐ Food ☐ Beverage				☐ Yes ☐ No
☐ Food ☐ Beverage				☐ Yes ☐ No
☐ Food ☐ Beverage				☐ Yes ☐ No
☐ Food ☐ Beverage				☐ Yes ☐ No
☐ Food ☐ Beverage				☐ Yes ☐ No
☐ Food ☐ Beverage				☐ Yes ☐ No
☐ Food ☐ Beverage				☐ Yes ☐ No
☐ Food ☐ Beverage				☐ Yes ☐ No
☐ Food ☐ Beverage				☐ Yes ☐ No
☐ Food ☐ Beverage				☐ Yes ☐ No
☐ Food ☐ Beverage				☐ Yes ☐ No
☐ Food ☐ Beverage				☐ Yes ☐ No
☐ Food ☐ Beverage				☐ Yes ☐ No
☐ Food ☐ Beverage				☐ Yes ☐ No
☐ Food ☐ Beverage				☐ Yes ☐ No
☐ Food ☐ Beverage				☐ Yes ☐ No
☐ Food ☐ Beverage				☐ Yes ☐ No
☐ Food ☐ Beverage				☐ Yes ☐ No
☐ Food ☐ Beverage				☐ Yes ☐ No
☐ Food ☐ Beverage				☐ Yes ☐ No
☐ Food ☐ Beverage				☐ Yes ☐ No
☐ Food ☐ Beverage				☐ Yes ☐ No
☐ Food ☐ Beverage				☐ Yes ☐ No

Application Due Dates

- A completed Special Events permit application is due to the Special Events office at a minimum of 60 days prior to the event date. Applications submitted after the deadline may be subject to denial of permit.

Cancellation Policy

- No permit fees will be refunded if the event is cancelled before or after the scheduled event date.
- Although permit fees are non-refundable, if an event is cancelled due to inclement weather, the permit fee can be credited towards and alternate date. Event organizers must be in touch with the Special Event Office before the scheduled event date or no more than three business days following the scheduled event date to reschedule. The alternate date must be within eight months of the original scheduled event date.

ADA Accessibility Guidelines

- Event Organizers must make the event accessible to people with disabilities to the greatest extent possible in compliance with the requirements of the Americans with Disabilities Act (ADA). If the event calls for portable restroom facilities, 5% of the total number of portable restroom units and at least one in each grouping of units must be accessible to persons with disabilities.
- Accessible parking must be provided for persons with disabilities. Depending on the location, county-designated accessible parking lots must be utilized for accessible parking for the event. Information regarding accessible parking locations should be included as part of the event advertising and clearly marked at the event site. At a minimum, all event personnel and volunteers should be aware of the locations of accessible parking to direct persons with disabilities and handicap tags to the appropriate parking areas.

Use of State Roads

- Any event that requires the use of a state road must complete the appropriate paperwork and submit it to the Special Events office at a minimum of thirty (30) days prior to the event date.

INSURANCE REQUIREMENTS

In General:

The Event Organizer/Applicant is required to provide liability insurance with coverage limits that depend upon the size, scope and location of the event. The insurance policy must include coverage for all Event Organizer/Applicant approved event activities, including those activities being provided by third party vendors. The policy must be for the dates of the event, including set-up and take-down days. Liquor Liability Insurance (if alcohol is sold) or Host Liquor Liability Insurance (if alcohol is given away) must be provided if alcohol is to be present at the event.

Insurance Requirements:

No proof of insurance will be required for a group or organization using a Santa Rosa County facility for a meeting if all of the following criteria is met:

- There is no charge to attend or participate
- There are no sales or solicitation for sales
- There are no display booths
- No alcohol is served
- No animals (livestock, reptiles, etc.) are present
- No large or dangerous equipment is present or used

Insurance Limits:

Minimum limits for event liability insurance are $300,000 per occurrence and in the aggregate. However, most events will require minimum limits of $1,000,000 per occurrence and in the aggregate depending upon the scope of the event. The minimum limit for Liquor or Host Liquor Liability Insurance is $1,000,000 each common cause and in the aggregate.

Additional Insured Status:

Santa Rosa County must be listed as an additional insured on all insurance coverage. Other additional insured entities may be required, depending on the scope or location of the event.

Certificate of Insurance:

A certificate of insurance evidencing the required insurance should be sent a minimum of 10 days prior to the event.
The certificate may emailed to melissal@santarosa.fl.gov.
The certificate holder should read:

Santa Rosa County
Risk Management
6495 Caroline Street, Suite I
Milton, FL 32570

County Code

In the event of any conflict between any provision of this summary document and County Code, the County Code takes precedence.

Pet Friendly Events, Large Banners, Stages, etc.

Coverage must be provided for all activities associated with the event.

Questions?

Please contact Santa Rosa County Risk Management at 850-983-1863 with any questions. Feel free to have your insurance company contact Risk Management directly regarding your event if you prefer.

FEE SCHEDULE

Required Fee	Amount
Pavilion rental - 3	$108.68; paid

9 December 2015

CrossFit Navarre
2209 Highway 87 Navarre, FL 32566
(850) 384-3542

Navarre Beach WODfest
RE: Proposal for charity fitness event held on Navarre Beach **May 7th - 8th, 2016**.

Santa Rosa County Board of Commissioners:

My name is Steven Philpot, I am Owner and Operator of CrossFit Navarre and Navarre Athletic Performance LLC, located at 2209 Highway 87 Navarre, FL. We are Navarre's original CrossFit and sports performance gym since 2011. The reason for this letter is to request for permission to utilize the Navarre Beach parking lot located next to the Navarre Beach Pier, and rent out three pavilions, to hold a two day fitness competition. A percentage of all our proceeds raised for this event will go toward our local Navarre Beach Fire Department and Navarre Beach Pier.

The dates of the event will be Saturday May 7th and Sunday May 8th 2016. We will need three pavilions to be reserved near the Navarre Pier rented out Friday, Saturday, and Sunday for our event staff and sign in area. Porta-potty rental and extra trash can receptacles will be used for the event convenience being dropped off Friday evening as well as surveying the area needed for our event. Prep and setup for the event will start Friday evening around 6:00 p.m. Santa Rosa County Sheriff Department will be used and paid for security by CrossFit Navarre throughout the event starting Friday evening and ending on Sunday at 5:00 p.m.

Saturday morning May 7th as well as Sunday May 8th the athlete's will check in with our event staff at the pavilions from 6:00 a.m. – 8:00 a.m. with the fitness event kicking off at 9:00 a.m. located in the parking beside the pier; with the event ending around 5:00 p.m. (See map attached of event area)

All of our fitness equipment used for the event, belongings, and waste will be picked up with nothing left behind in the parking lot from our staff or athletes after event end on Sunday. Each athlete will receive an event T-shirt with our logo representing Navarre Beach and event sponsors upon sign up. Our event will draw a large number of local and out of state athletic enthusiasts to strengthen our local economy and increase tourism. We are expecting around 800-1200 athletes and spectators throughout the weekend.

Our event will be insured through Affiliate Guard Insurance, with Santa Rosa County listed on insurance deed along with CrossFit Navarre.

Our overall goal for this event is to have a fun and safe weekend of fitness while raising money for our Navarre Beach Fire Department and Navarre Beach Pier. We know our event will draw local and non-local crowds with increase of local business revenues. Many of our athletes and their families will be staying at hotels and condos on Navarre Beach throughout the week of the event. We hope to bring awareness to the importance of our own Navarre Beach Fire Department and Pier. With your endorsement and approval, our planning can continue to make this event possible. Thank you for your time and consideration.

Steven E. Philpot
OWNER, CROSSFIT NAVARRE

9 December 2015

Navarre Beach WODfest, Event Information

Name of event: Navarre Beach WODfest
Dates: May 7th & 8th, 2016
Location: Navarre Beach Pier Parking Lot
Event Security: Santa Rosa County Sheriff Department
First day of event: 9:00a.m. - 5:00p.m. Saturday May 7th, 2016
Last day of event: 9:00a.m. - 6:00p.m. Sunday May 8th, 2016
Event Coordinator: Steve Philpot, Owner

Event Contact Information

CrossFit Navarre, EST 2011
2209 Highway 87 south
Navarre, FL 32566
(850) 384-3542
www.crossfitnavarre.com
Steve Philpot, Owner
Steve_Philpot@hotmail.com

CROSSFIT NAVARRE
EST 2011

9 December 2015

FLORIDA DEPARTMENT OF STATE
DIVISION OF CORPORATIONS

Detail by Entity Name

Florida Limited Liability Company

NAVARRE ATHLETIC PERFORMANCE LLC

Filing Information

Document Number	L15000141984
FEI/EIN Number	NONE
Date Filed	08/19/2015
State	FL
Status	ACTIVE
Last Event	LC AMENDMENT
Event Date Filed	09/03/2015
Event Effective Date	NONE

Principal Address

1831 PELICAN LANE
NAVARRE, FL 32566

Mailing Address

1831 PELICAN LANE
NAVARRE, FL 32566

Registered Agent Name & Address

PHILPOT, STEVEN E
1831 PELICAN LANE
NAVARRE, FL 32566

Authorized Person(s) Detail

Name & Address

Title MGR

PHILPOT, STEVEN E
1831 PELICAN LANE
NAVARRE, FL 32566

Annual Reports

No Annual Reports Filed

Document Images

09/03/2015 -- LC Amendment

Santa Rosa County Navarre Be[illegible] Park
1411 Utility Drive
Navarre Beach, FL 32566

RESERVED

NAVARRE BEACH PARK & PUBLIC BEACH PAVILIONS
APPLICATION FOR RESERVATION

Pavilion Name: Flounder, Seagull, Sandcrab

Date(s) Requested: May 7 + 8

Organization Name: CrossFit Navarre

✓ **Profit** ____ **Non-Profit*** ___ **Government***

*Proof of non-profit/governmental status must be provided if checked and requesting tax-exempt pricing

NAVARRE BEACH DIVISION JAN 27 2016 SANTA ROSA COUNTY

Activity Sponsor: XFit

Contact Name: Steve Philpot

Street Address: 2209 Hwy 87

City: Navarre **State:** FL **Zip:** 32566

Home Phone: **Work Phone:**

Cell Phone (850) 384-3542 **E-mail:** Steve_Philpot@hotmail.com

Briefly explain the type of activities planned for this use:
Fitness event in parking lot, shade, food / Drinks

+Note: vendors (profit) are NOT allowed in Navarre Beach Park (non profit must have approval)
Sec. 15-40. - Commercial Use. No person shall make any commercial use of a county park, unless authorized by Santa Rosa County. Such prohibited uses include, but are not limited to, the

NavarreBeachUtilities Receipt Number: 14754840

01/27/2016 05:12 PM

Service Information

Customer Agrees to pay surcharge: yes

Remarks: Flounder, Seagull, Sand Crab

CustomerName: Steven Philpot

Your Initials: lb Navarre Cross Fit Event

Payment Amount

Amount: $105.00

Service Fee: $3.68

Total: $108.68

Credit Card Info

Name on Card: Steven E Philpot

Card Number: **********8857

Contact Navarre Beach Dept: Ph: 850-981-8888, Fax: 850-981-8887, Email: Navarre-Beach@santarosa.fl.gov

Administrative Item 12

Santa Rosa County
Development Services

Beckie Cato, AICP
Planning and Zoning Director

Rhonda C. Royals
Building Official

MEMORANDUM

TO: Board of County Commissioners

FROM: Beckie Cato, Planning Director

THROUGH: Tony Gomillion, County Administrator

DATE: January 2, 2016

RE: Discussion of Update of Parks-related County Code Requirements

RECOMMENDATION:

Discussion of the possible update of parks-related county code requirements.

BACKGROUND:

Chapter 15, Article II of the County Code of Ordinances contains regulations related to parks. A review by staff identified several subsections that should probably be updated to reflect current practice. The enclosed document identifies those sections and offers recommendations and questions for consideration.

NEXT STEPS:

If approved by the Board, staff will draft code changes for consideration at a future meeting.

ARTICLE II. - PARK RULES

Policy Questions and Recommendations

Sec. 15-27. - Alcoholic beverages.

It shall be unlawful to bring into, consume, sell, or cause to allow to be sold, any beer, wine, liquors or alcoholic beverages of any kind, in any County Park, except on Navarre Beach when authorized by Santa Rosa County. Alcoholic beverages shall be allowed in Navarre Park by state-recognized nonprofit organizations. Proper licensing and insurance shall be required.

Question: Should alcohol use remain limited to Navarre Beach?

Question: Should alcohol remain limited to nonprofit organizations? If yes, should variances be allowed with Board approval?

Sec. 15-28. - Reservations of facilities and fees.

(a) Only advanced reservations for pavilion use may be applied for. Reservations for picnic tables and/or other designated park areas are prohibited.

Many county facilities are currently reserved administratively such as the auditorium, community centers, and arenas. Reservation of park properties are approved by the Board. Recommendation: Revise policy to continue the current administrative reservation process for facilities and to allow Board approval for reservation of park properties.

(b) A fee for a permit for advanced reservations for pavilions will be a designated amount set by the board of county commissioners. Permits may be applied for at the office of parks and recreation located at the county auditorium.

Recommendation:
- Review and/or established rental fees for ratification or approval by the Board.
- Revise policy to reflect reservation of other county facilities/areas.
- Revise policy to remove location for permit application as this is facility dependent.

Sec. 15-29. - Vehicles and parking facilities.

(a) No person shall park any vehicle, camper, trailer or any towed conveyance in any areas not specifically designated for said vehicle.

Recommendation: Revise this policy to reflect grant-related limits on use of boat trailer parking lots.

Recommendation: Revise policy to allow reservation of parking areas for special events with Board approval.

(b) There shall be no overnight parking of any vehicle, camper, trailer or any towed conveyance in any area unless so posted.

(c) No motorized vehicle shall be allowed on any portion of the recreational facility other than designated roads or parking area.

Sec. 15-35. - Fireworks.

No person shall discharge or set off on or within a county park any firecrackers, torpedoes, rockets, cap pistols, or other fireworks.

Recommendation: Revise this policy to allow for public fireworks displays with Board approval.

Sec. 15-36. - Audio devices.

(a) No person shall operate or use any audio device, including radio, television, musical instruments, or any other noise producing devices, such as electrical generators, and equipment driven by motor engines, in such a manner at such times as to disturb other persons.

(b) No person shall operate or use any public address system, whether fixed, portable, or vehicle mounted, except when such operation has been approved by the director of parks and recreation.

Recommendation: ??

Sec. 15-40. - Commercial use.

No person shall make any commercial use of a county park, unless authorized by Santa Rosa County. Such prohibited uses include, but are not limited to, the sale, or the display for sale, of any merchandise; the servicing or repairing of any vehicle, except the rendering of emergency service; the storage of vehicles being serviced or repaired on abutting property or elsewhere; the solicitation for the sale of goods, property, or services; and the display of advertising of any sort. Nonprofit civic organizations may conduct activities in county parks such as sales of food or merchandise if the civic organization obtains approval from Santa Rosa County for such activity.

Question: Should this policy be revised to allow commercial use by other than nonprofit civic organizations?

Administrative Item 13

Town of Jay

3695 HIGHWAY 4
P.O. BOX 66
JAY, FLORIDA 32565
PHONE (850) 675-4556
FAX (850) 675-6539

KURVIN QUALLS, Mayor
LINDA CARDEN, MMC, Clerk

Council

CHARLES "Chubby" HAVEARD
JANE A. HAYES
MAXINE M. IVEY
SHON O. OWENS

January 21, 2016

Don Salter, S.R. County Commissioner
Milton, Florida

Dear Mr. Salter:

The Town of Jay would like to request a $25,000.00 allocation to help assess the redesign for current and future needs of the Bray-Hendricks Park.

Thanking you in advance for your consideration in this matter.

Linda Carden

Linda Carden
Town Clerk

Administrative Item 14

There is no back-up documentation for this item.

SANTA ROSA COUNTY ENGINEERING
SANTA ROSA COUNTY, FLORIDA
6051 OLD BAGDAD HWY., STE. 300
MILTON, FLORIDA 32583
www.santarosa.fl.gov

Preliminary
Engineers Report
February 8, 2016

Roger A. Blaylock, P.E.
Santa Rosa County Engineer

This is a Preliminary check list:
The items listed below may be on the agenda for meeting of Board of County Commissioners of Santa Rosa County, Florida, for February 11, 2016 at 9:00 a.m. in Milton, Florida.

1. Discussion of Change Order No. 2 to the contract with Roads, Inc. for the Berryhill Road Resurfacing project for 16 additional days with a new completion date of February 24, 2016.

2. Discussion of Change Order No. 1 to the contract with Roads, Inc. for the Tiger Point Boulevard Sidewalk project for 33 additional days with a new completion date of March 25, 2016.

3. Discussion of waiving landfill disposal fees for waste from the Blackwater WMA Game Cleaning Station from October through February.

(850)981-7100 • FAX (850)983-2161

Engineering Item 1

SANTA ROSA COUNTY ENGINEERING
SANTA ROSA COUNTY, FLORIDA
6051 OLD BAGDAD HWY., STE. 300
MILTON, FLORIDA 32583
www.santarosa.fl.gov

MEMO

TO: Michael Schmidt

FROM: Chris Phillips CP

DATE: February 3, 2016

RE: Berryhill Road Resurfacing - Change Order #2 – Time Extension

---

The following are days reflective of weather issues:

January 2016: 1/7 (recovery day), 1/8 (rain), 1/11 – 1/13 (cold temps), 1/15 (rain), 1/18 – 1/19 (cold temps), 1/20 – 1/22 (rain), 1/26 – 1/28 (rain)

February 2016: 2/2 – 2/3 (rain)

A "recovery" day is when there was a prior weather event that required "recovery" of the site so work could continue. In order to place the type of asphalt used on this project, the air temperature must be 50 degrees and rising in order to get a full day of production.

The need for this extension has been documented in the daily reports by the CEI consultant and has been approved by FDOT LAP staff.

The total days will be 16 additional (this change order) plus 28 additional (previous change order) to the original contract time of 75 days for a new completion date of February 24, 2016 which, weather permitting should be attained.

To date, all of the paving is complete. The only remaining item is the final thermoplastic striping which cannot be applied within 14 days of the placement of the final layer of asphalt. We expect final striping to commence on or around February 8, 2016.

Engineering Item 2

SANTA ROSA COUNTY ENGINEERING
SANTA ROSA COUNTY, FLORIDA
6051 OLD BAGDAD HWY., STE. 300
MILTON, FLORIDA 32583
www.santarosa.fl.gov

MEMO

TO: Michael Schmidt

FROM: Chris Phillips CP

DATE: February 3, 2016

RE: Tiger Point Sidewalks- Change Order #1 – Time Extension

The following are days reflective of weather issues or allowances for Holidays per FDOT and LAP contracting practices:

December 2015: 12/21 – 12/22 (rain)

January 2016: 1/4 – 1/6 (cold temp), 1/7 (rain), 1/8 (cold temp), 1/9 (rain), 1/11-1/13 (cold temp), 1/14 – 1/16 (rain), 1/18 – 1/19 (cold temp), 1/20 – 1/23 (rain), 1/26 (rain)

Holiday Days:

December 2015 - 12/23 thru 12/31 (9 days)

January 2016 - 1/1 thru 1/3 (3 days)

Per the specs, the temperature must be 50 degrees and rising in order to place concrete. The use of sand clay base beneath the sidewalk causes the project to be very sensitive to rainfall.

The need for this extension has been documented in the daily reports by the CEI consultant and has been approved by FDOT LAP staff.

The total days will be 33 additional to the original contract time of 75 days for a new completion date of March 25, 2016 which, weather permitting, should be attained.

Engineering Item 3

SANTA ROSA COUNTY ENGINEERING
SANTA ROSA COUNTY, FLORIDA
6051 OLD BAGDAD HWY., STE. 300
MILTON, FLORIDA 32583
www.santarosa.fl.gov

MEMO

TO: Michael Schmidt

FROM: Chris Phillips CP

DATE: February 8, 2016

RE: Tiger Point Sidewalks CEI- Change Order #1 – Time Extension

---

Construction Engineering and Inspection (CEI) is required of all federal funded Local Agency Program projects. The contract with our CEI consultant, AECOM is scheduled to expire on February, 14, 2016.

Due to weather days (33 days) as outlined in the change order for the construction project, the contract with AECOM must be extended a commensurate amount in order for construction inspection and federally required labor compliance measures to continue. A project wrap-up period will also be included. The proposed extension will move the expiration day to April 25, 2016. There will be no change to the fee, only contract days.

Engineering Item 4

SANTA ROSA COUNTY ENGINEERING
ENVIRONMENTAL DEPARTMENT
6065 Old Bagdad Highway
Milton, FL 32583
www.santarosa.fl.gov

Roger A. Blaylock, P.E.
County Engineer

Ronald C. Hixson
Environmental Manager

Memo

To: Tony Gomillion, County Administrator

From: Ronald Hixson, Environmental Manager

Thru: Roger Blaylock, P.E., County Engineer

Date: **January 27, 2016**

Re: **DISPOSAL OF ANIMAL CARCASSES FROM THE BLACKWATER FOREST WMA GAME CLEANING STATION**

Discussion:

Landfill Disposal Fee Waiver for Blackwater Forest WMA Game Cleaning Station Waste

Finding:

The Santa Rosa County Environmental Department has been contacted by the Florida Forestry Service (FFS), the Fish and Wildlife Service (FWS), and the Santa Rosa County Southeastern Dog Hunters Association (SRC SEDHA) regarding the game cleaning station located within the Blackwater Forest Wildlife Management Area. The purpose of this station is to keep game carcasses from being dumped illegally in streams, woods, and off of the sides of roadways, but due to past budgetary constraints the game cleaning station has been closed indefinately. The SRC SEDHA is planning to reopen the facility with the help of the FFS and the FWS. The groups came to the SRC Environmental Department to ask if the county would be willing to waive the disposal fees at the Central Landfill for the disposal of the game carcasses during the months of October-February (Deer Hunting Season). They are estimating that use of the station would yield approximately 20-30 tons of waste annually, which would equate to approximately $720.00- $1080.00 in lost revenue annually. See the attached presentation for additional information.

Actions to be Considered:

That the Board of County Commissioners allow the SRC Environmental Department to waive the landfill disposal fees for waste that comes from the Blackwater WMA Game Cleaning Station from October-February.

RECEIVED
FEB - 1 2016
SANTA ROSA COUNTY
ENGINEERING

(850) 981-7135 • FAX (850) 981-7133

GAME CLEANING STATION

Located In Blackwater Forest WMA ,FFS Munson Florida.

FFS,FWC, Santa Rosa County, Southeastern Dog Hunters Association & Other Outdoor Associations Inside Santa Rosa County FL & Abroad.

GAME CLEANING STATION

PUBLIC USE

- Estimated 600+ deer are harvested on Blackwater WMA each year.
- A growing % of Santa Rosa County hunters & Counties adjacent to are living in urban areas. (Subdivisions etc.)
- There are no public land cleaning options available at this time.
- There are no public land game cleaning station disposal options at this time.
- Unfortunately Game Carcasses Are Wrongly Disposed Of.
- Unfortunately public hunters with game must process in areas not suitable for cleaning conditions.

OBJECTIVE

- FFS and FWC are working on a budget to re-open the very popular game cleaning station in the Blackwater WMA.
- Santa Rosa County Locals & Tourist visiting our county will be very pleased to have an area to process their game.
- We ask if Santa Rosa County would waive the landfill disposal fee's for game carcasses during the dates below?
- This waiver will consist of the months Oct – Feb during hunting season's only
- Estimated 20 to 30 thousand pounds of waste

PROCESS FOR DISPOSAL

- Break down the carcass into sections
- The carcass must go into the appropriate garbage bags after cleaning the game
- Garbage bags will be provided by the FFS at the game cleaning station
- Insert the carcass loaded bag into the dump trailer provided by the FFS.
- The FFS will deliver and dump the game carcass loaded bags into the appropriate area of the landfill.
- Expected deliveries per week 1 to 3

Public Services Committee

Chaired by:
Cole and R. Williamson

Meeting:
February 8, 2015, 9:00 A.M.

AGENDA

Emergency Management

1. Discussion of approval to amend the AT&T agreement to allow for the movement of a site near the Sheriff's office buildings.

2. Discussion of Tsunami warning sign conceptual design.

Public Services 1

Department of Public Services

Santa Rosa County, Florida
6051 Old Bagdad Highway, Suite 202
Milton, Florida 32583
www.santarosa.fl.gov
Office: (850) 981-7040 Fax: (850) 623-1208

MEMORANDUM

To: Santa Rosa County Board of County Commissioners

From: Brad Baker, Director, Emergency Management

Through: Tony Gomillion, County Administrator

Re: AT&T Agreement - Amendment

Date: February 11, 2016

RECOMMENDATION

Request that the Board approve an amendment to the AT&T agreement and authorize the Chairman to sign all related documents.

BACKGROUND

As part of the Motorola radio project it has been determined that it is necessary to move a site along with its associated components in order to provide audio coverage inside the Santa Rosa Sheriff's Office buildings and, more importantly, the jail. The amendment will add fiber connectivity to the Randy Brown Rd. site and extend the agreement for a thirty-six month period. There is a non-recurring charge of $2,075 for the unit in addition to a usual monthly rate. Funds for this project will come from Intragovernmental Communications Program (ICP)

COMPLETION

Santa Rosa County Attorney has reviewed the agreement and original documents will be forwarded to the BOCC for signature.

Public Services 2

Department of Public Services

Santa Rosa County, Florida
6051 Old Bagdad Highway, Suite 202
Milton, Florida 32583
www.santarosa.fl.gov
Office: (850) 983-1943 Fax: (850) 983-1856

MEMORANDUM

To: Santa Rosa County Board of County Commissioners

From: Brad Baker, Director, Emergency Management

Through: Tony Gomillion, County Administrator

Re: Navarre Beach Signage

Date: February 11, 2016

DISCUSSION

Discussion on Tsunami warning sign design.

BACKGROUND

On December 10, 2015 the BOCC approved the placement of Tsunami signs on Navarre Beach. The conceptual design is complete and this item is to afford the public a venue to comment on design prior to placement.

COMPLETION

Upon final design completion Emergency Management will purchase signs and work with staff to place at walkovers.

In case of EMERGENCY dial 911
You are at beach access 41-A
BE TSUNAMI SMART, KNOW THE NATURAL SIGNS
If at the coast and you:
SEE
the water withdraw an unusual distance?
RUN
HEAR
a strange roar?
RUN
RUN
to high ground or inland
if ANY of these signs occur

AGENDA
PUBLIC WORKS COMMITTEE

February 8, 2016

Chairman: Commission Salter

Vice Chairman: Commissioner Cole

No Items

Budget & Financial Management Committee

Chaired by:
Rob Williamson & Don Salter

Meeting:
February 8, 2016, 9:00 a.m.

AGENDA

Budget:

1. **Budget amendment 2016 – 096** in the amount of **$ 76,720** to carry forward unspent funds for engineering services with Hatchmott McDonald for the Peter Prince Airport Runway rehabilitation project as approved at the January 8, 2015 meeting.
2. **Budget amendment 2016 – 097** in the amount of **$ 5,000** to transfer funds from the District IV Recreation Fund to the General Fund for sod for the new Holley Ball Park playground.
3. **Budget amendment 2016 – 098** in the amount of **$ 21,862** to recognize the FY2016 EMS County Grant revenue awarded and authorizes for expenditure.
4. **Budget amendment 2016 – 099** in the amount of **$ 28,334** to carry forward funds for Bomag compactor repair by Beard Equipment Company as approved at the January 14, 2016 meeting. Beard Equipment Company will return $10,977 core charge upon completion.
5. **Budget amendment 2016 – 100** in the amount of **$ 65,000** to carry forward funds in the Landfill Fund for green waste processing and grinding services with Jimmie Crowder Excavating and Land Clearing, Inc. as approved at the January 14, 2016 meeting.
6. **Budget amendment 2016 – 101** in the amount of **$ 12,836** to provide funding for the purchase of a Motorola MCD 5000 Desk Set (Consolette) as approved at the January 28, 2016 meeting.
7. **Budget amendment 2016 – 102** in the amount of **$ 2,000** to allocate District III Recreation Funds for a Tennis Backboard for Fidelis Tennis Courts.
8. **Budget amendment 2016 – 103** in the amount of **$ 25,000** to fund the redesign for current and future needs of the Bray-Hendricks Park in the Town of Jay from District 3 Recreation Funds.
9. Discussion and Presentation of the Navarre Beach Renourishment Project. (Thursday)

County Expenditure / Check Register:

10. Discussion of county check register.

Budget Item 1

98-091
Form 84001 Rev 8/10/92

BUDGET MODIFICATION RESOLUTION

No.

Whereas, the Board of County Commissioners has determined that a need exists to amend the budget pursuant to Florida Statute 129.06. NOW, THEREFORE, The Board of County Commissioners of Santa Rosa County, Florida does make the following budget amendments:

REQUESTER ACTION DATE: January 28, 2016

FROM: **Peter Prince Field**
TO: Board of County Commissioners
VIA: Budget Director
SUBJ: Request Approval of the following

ADDITION:
MODIFICATION: X
DELETION:
OVERDRAFT:

	Line Item Number	Description	Amount
FROM:	**405 – 3990001**	**Cash Carry Forward**	**$ 76,720**
To:	**4021-531001**	**Professional Services**	**$ 76,720**

State reason for this request:

Carries forward unspent funds for engineering services with Hatchmott McDonald for the Peter Prince Airport Runway rehabilitation project as approved at the January 8, 2015 BOCC Regular Meeting.

Requested by Shirley Powell/s/

BUDGET DIRECTOR ACTION DOCUMENT NO. **2016-096**

Budget Updated: _____ Allowed: _____ Forwarded: _____ Returned: _____

Comment: _____

_____
BUDGET DIRECTOR

BUDGET COMMITTEE ACTION DATE: February 8, 2016

Approved: ___ Hold: ___ Withdrawn: ___ Comment: _____

PASSED AND ADOPTED by the Board of County Commissioners of Santa Rosa County, Florida on this 11th day Of ***February, 2016.***

ATTESTED:

_____
CHAIRMAN

_____
CLERK OF THE COURTS

Jayne Bell

From: Shirley Powell
Sent: Friday, January 22, 2016 8:36 AM
To: Jayne Bell
Cc: Michael Schmidt
Subject: Peter Prince Airport Runway 18-36 Rehab

Jayne,

Work Order #6 with Hatch Mott MacDonald was approved January 8, 2015 in the amount of $76,720.00. Budget Amendment 2015-092 was approved to fund this work order (4021-531001) at the January 22, 2015 BCC meeting. We are now receiving invoices for this project and would request a budget amendment to carry forward the unspent funds in the account listed previously. Please call with any questions and thanks!!

Shirley J. Powell
Santa Rosa County Engineering
6051 Old Bagdad Highway
Ste. 300
Milton, FL 32583
(850) 981-7100 Voice
(850) 983-2161 Fax

Florida has a very broad Public Records Law. Virtually all written communications to or from Santa Rosa County Personnel are public records available to the public and media upon request. E-mail sent or received on the county system will be considered public and will only be withheld from disclosure if deemed confidential pursuant to State Law.

Hatch Mott MacDonald

000 20854

Hatch Mott MacDonald
220 West Garden St. Suite 700
Pensacola, FL 32502
T 850-484-6011 www.hatchmott.com

January 4, 2016

B.A. 2015-054
76,720
NEW B.A. TO CF UNSPENT FL
Approved 1/20/15

JAN 11 2016

Santa Rosa County Board of County Commissioners
6495 Caroline St.
Suite M
Milton, FL 32570

4021-531001

Reference : Peter Prince Runway 18-36 Rehab (Mill and Overlay)
Work Order #6
HMM Project # 353243

NO MONEY
10,000.00

Invoice # 225965

FOR PROFESSIONAL SERVICES RENDERED THROUGH DECEMBER 31, 2015

Task Description	Fee	%	Previously	Amount due	Total Invoiced
1) Project Kick-Off and Data Gathering	$2,740.00	100.00%	$0.00	$2,740.00	$2,740.00
2) Geotechnical Exploration	$5,500.00	0.00%	$0.00	$0.00	$0.00
3) Topographic Survey	$10,040.00	100.00%	$0.00	$10,040.00	$10,040.00
4) Construction Plans Specifications	$48,180.00	30.00%	$0.00	$14,454.00	$14,454.00
5) Permitting	$2,100.00	0.00%	$0.00	$0.00	$0.00
6) Advertising & Bid Support Services	$3,500.00	0.00%	$0.00	$0.00	$0.00
7) QA/QC	$2,160.00	0.00%	$0.00	$0.00	$0.00
Expenses	$2,500.00	0.00%	$0.00	$0.00	$0.00
Grand Total	**$76,720.00**		**$0.00**	**$27,234.00**	**$27,234.00**

Total Amount Invoiced To Date	$27,234.00
Previous Fee Billing	$0.00
Total Amount Due This Month	**$27,234.00**

mjk

DONALD C. SPENCER
CLERK OF COURT &
COMPTROLLER
2016 JAN 12 PM 8 21
SANTA ROSA COUNTY, FL
FINANCE FILED

PAYMENT REMITTANCE ADDRESS ONLY:

Hatch Mott MacDonald
P.O. Box 510344
Pittsburgh, PA 15250-0344

Approved By: _____
Heath Jenkins, Project Manager

MWS
1/14/16

DONALD C. SPENCER
CLERK OF COURT &
COMPTROLLER
2016 JAN 15 AM 11 06
SANTA ROSA COUNTY, FL
FINANCE FILED

Budget Item 2

2

98-091
Form 84001 Rev 8/10/92

BUDGET MODIFICATION RESOLUTION

No.

Whereas, the Board of County Commissioners has determined that a need exists to amend the budget pursuant to Florida Statute 129.06. NOW, THEREFORE, The Board of County Commissioners of Santa Rosa County, Florida does make the following budget amendments:

REQUESTER ACTION DATE: February 2, 2016

FROM:	**District IV**	ADDITION:
TO:	Board of County Commissioners	MODIFICATION: X
VIA:	Budget Director	DELETION:
SUBJ:	Request Approval of the following	OVERDRAFT:

	Line Item Number	**Description**	**Amount**
Fund 314:	**2324 – 599001**	**Reserve for Contingencies**	**($ 5,000)**
	2324 – 59100001	**To General Fund**	**$ 5,000**
Fund 001:	**001 – 3810003**	**From District 4**	**$ 5,000**
	2600 – 563001	**Other Improvements**	**$ 5,000**

State reason for this request:

Transfer funds from District IV Recreation Fund to General Fund for sod at the new Holley Ball Park playground.

Requested by: Stephen Furman/s/

BUDGET DIRECTOR ACTION DOCUMENT NO. **2016-097**

Budget Updated: _____ Allowed: _____ Forwarded: ____ Returned: _____

Comment: _____ _____

BUDGET DIRECTOR

BUDGET COMMITTEE ACTION DATE: February 8, 2016

Approved: ___ Hold: ___ Withdrawn: ___ Comment: _____

PASSED AND ADOPTED by the Board of County Commissioners of Santa Rosa County, Florida on this ***11th*** *day of* ***February, 2016.***

ATTESTED: _____

CHAIRMAN

_____

CLERK OF THE COURTS

Jayne Bell

From: Stephen Furman
Sent: Tuesday, February 02, 2016 12:51 PM
To: Jayne Bell
Cc: Tony Gomillion; Sabrina White; Emily Spencer; Tammy Simmons; Henry Brewton
Subject: FW: Holley Ball Park - Playground BA

Jayne, we are requesting a Budget Amendment for the transfer of $5,000.00 from District 4 Recreation Funds to the appropriate Parks Dept. budget line to pay for sod at the new Holley Ball Park playground. Tammy suggested that the appropriate line may be 2600-563001, but she will defer to you on this point.

Thanks,

Stephen

From: Tammy Simmons
Sent: Tuesday, February 02, 2016 11:15 AM
To: Stephen Furman <StephenF@santarosa.fl.gov>
Subject: RE: Holley Ball Park - Playground

2600-563001 is my guess, typically Jayne adds this as she is more familiar with appropriate expense lines.

From: Stephen Furman
Sent: Tuesday, February 02, 2016 9:58 AM
To: Tammy Simmons
Subject: RE: Holley Ball Park - Playground

Please tell me which budget line that the money needs to be transferred into.

Thanks,

Stephen

From: Tammy Simmons
Sent: Tuesday, February 02, 2016 7:16 AM
To: Stephen Furman <StephenF@santarosa.fl.gov>
Subject: FW: Holley Ball Park - Playground

Will you get the following budget amendment request on the agenda. Discussion of budget amendment in the amount of $5,000 for sod at the Holley Ball Park playground from District 4 recreation funds.

From: Commissioner Rob Williamson
Sent: Monday, February 01, 2016 5:15 PM
To: Tammy Simmons
Cc: Stephen Furman; Tony Gomillion; Jayne Bell
Subject: Re: Holley Ball Park - Playground

Budget Item 3

98-091
Form 84001 Rev 8/10/92

BUDGET MODIFICATION RESOLUTION

No.

Whereas, the Board of County Commissioners has determined that a need exists to amend the budget pursuant to Florida Statute 129.06. NOW, THEREFORE, The Board of County Commissioners of Santa Rosa County, Florida does make the following budget amendments:

REQUESTER ACTION DATE: February 2, 2016

FROM:	**Grant Fund/ Emergency Management**	ADDITION:
TO:	Board of County Commissioners	MODIFICATION: X
VIA:	Budget Director	DELETION:
SUBJ:	Request Approval of the following	OVERDRAFT:

	Line Item Number	**Description**	**Amount**
Fund 104:	**104 – 3346902**	**EMS Grant (Revenue)**	**$ 21,862**
	2201 – 5340016	**EMS County Grant**	**$ 21,862**

State reason for this request:

Recognizes the FY2016 EMS County Grant ($21,862) revenue awarded and authorizes expenditure in current year.

Requested by Brad Baker /s/

BUDGET DIRECTOR ACTION DOCUMENT NO. **2016-098**

Budget Updated: _____ Allowed: _____ Forwarded: _____ Returned: _____

Comment: _____ _____

BUDGET DIRECTOR

BUDGET COMMITTEE ACTION DATE: February 8, 2016

Approved: ____ Hold: ____ Withdrawn: ____ Comment: _____

PASSED AND ADOPTED by the Board of County Commissioners of Santa Rosa County, Florida on this ***11th*** *day Of* ***February, 2016.***

ATTESTED: _____

CHAIRMAN

_____

CLERK OF THE COURTS

Budget Item 4

4

98-091
Form 84001 Rev 8/10/92

BUDGET MODIFICATION RESOLUTION

No.

Whereas, the Board of County Commissioners has determined that a need exists to amend the budget pursuant to Florida Statute 129.06. NOW, THEREFORE, The Board of County Commissioners of Santa Rosa County, Florida does make the following budget amendments:

REQUESTER ACTION — DATE: February 2, 2016

FROM:	**Landfill**	ADDITION:
TO:	Board of County Commissioners	MODIFICATION: X
VIA:	Budget Director	DELETION:
SUBJ:	Request Approval of the following	OVERDRAFT:

	Line Item Number	**Description**	**Amount**
From:	**411 – 3990001**	**Cash Carry Forward**	**$ 28,334**
To:	**2400 – 564001**	**Machinery & Equipment**	**$ 28,334**

State reason for this request:

To carry forward funds for Bomag compactor repair by Beard Equipment Company as approved at the January 14, 2016 meeting. Beard Equipment Company will return $10,977 core charge upon completion of work.

Requested by: Ron Hixson/s/

BUDGET DIRECTOR ACTION — DOCUMENT NO. **2016-099**

Budget Updated: _____ Allowed: _____ Forwarded: _____ Returned: _____

Comment: _____ _____

BUDGET DIRECTOR

BUDGET COMMITTEE ACTION — DATE: February 8, 2016

Approved: ____ Hold: ____ Withdrawn: ____ Comment: _____

PASSED AND ADOPTED by the Board of County Commissioners of Santa Rosa County, Florida on this ***11th*** *day Of* ***February, 2016.***

ATTESTED:

_____
CHAIRMAN

_____
CLERK OF THE COURTS

Budget Item 5

98-091
Form 84001 Rev 8/10/92

5

BUDGET MODIFICATION RESOLUTION

No.

Whereas, the Board of County Commissioners has determined that a need exists to amend the budget pursuant to Florida Statute 129.06. NOW, THEREFORE, The Board of County Commissioners of Santa Rosa County, Florida does make the following budget amendments:

REQUESTER ACTION — DATE: February 2, 2016

FROM:	**Landfill**	ADDITION:
TO:	Board of County Commissioners	MODIFICATION: X
VIA:	Budget Director	DELETION:
SUBJ:	Request Approval of the following	OVERDRAFT:

	Line Item Number	**Description**	**Amount**
From:	**411 – 3990001**	**Cash Carry Forward**	**$ 65,000**
To:	**2400 – 564001**	**Machinery & Equipment**	**$ 65,000**

State reason for this request:

To carry forward funds for green waste processing and grinding services with Jimmie Crowder Excavating and Land Clearing, Inc. in the amount of $20.83 per ton for no less than three (3) events and no more than seven (7) and $3.75 per cubic yard in the event of a natural disaster as approved at the January 14, 2016 meeting.

Requested by: Ron Hixson/s/

BUDGET DIRECTOR ACTION — DOCUMENT NO. **2016-100**

Budget Updated: _____ Allowed: _____ Forwarded: ____ Returned: _____

Comment: _____ _____
BUDGET DIRECTOR

BUDGET COMMITTEE ACTION — DATE: February 8, 2016

Approved: ___ Hold: ___ Withdrawn: ___ Comment: _____

PASSED AND ADOPTED by the Board of County Commissioners of Santa Rosa County, Florida on this ***11th*** *day Of* ***February, 2016.***

ATTESTED:

_____
CHAIRMAN

_____
CLERK OF THE COURTS

Budget Item 6

6

98-091
Form 84001 Rev 8/10/92

BUDGET MODIFICATION RESOLUTION

No.

Whereas, the Board of County Commissioners has determined that a need exists to amend the budget pursuant to Florida Statute 129.06.
NOW, THEREFORE, The Board of County Commissioners of Santa Rosa County, Florida does make the following budget amendments:

REQUESTER ACTION — DATE: February 3, 2016

FROM:	**Emergency Management**	ADDITION:
TO:	Board of County Commissioners	MODIFICATION: X
VIA:	Budget Director	DELETION:
SUBJ:	Request Approval of the following	OVERDRAFT:

	Line Item Number	**Description**	**Amount**
From:	**9001 – 5990013**	**ICP Reserves**	**($ 12,836)**
To:	**3410 -- 5640012**	**Machinery & Equipment**	**$ 12,836**

State reason for this request:

To provide funding for the purchase of a Motorola MCD 5000 Desk set (Consolette) as approved at the January 28, 2016 meeting.

Requested by: Brad Baker /s/

BUDGET DIRECTOR ACTION — DOCUMENT NO. **2016-101**

Budget Updated: _____ Allowed: _____ Forwarded: _____ Returned: _____

Comment: _____ _____
BUDGET DIRECTOR

BUDGET COMMITTEE ACTION — DATE: February 8, 2016

Approved: ____ Hold: ____ Withdrawn: ____ Comment: _____

PASSED AND ADOPTED by the Board of County Commissioners of Santa Rosa County, Florida on this ***11th*** *day Of* ***February, 2016.***

ATTESTED:

_____
CHAIRMAN

_____
CLERK OF THE COURTS

Budget Item 7

98-091
Form 84001 Rev 8/10/92

BUDGET MODIFICATION RESOLUTION

No.

Whereas, the Board of County Commissioners has determined that a need exists to amend the budget pursuant to Florida Statute 129.06. NOW, THEREFORE, The Board of County Commissioners of Santa Rosa County, Florida does make the following budget amendments:

REQUESTER ACTION — DATE: February 3, 2016

FROM:	**District III Recreation Fund**	ADDITION:
TO:	Board of County Commissioners	MODIFICATION: X
VIA:	Budget Director	DELETION:
SUBJ:	Request Approval of the following	OVERDRAFT:

	Line Item Number	**Description**	**Amount**
Fund 313:	**2323 – 990001**	**Reserve for Contingencies**	**($ 2,000)**
	9000 – 59100001	**To General Fund**	**$ 2,000**
Fund 001:	**001 – 38100010**	**From District III Rec Fund**	**$ 2,000**
	2600 – 564001	**Machinery & Equipment**	**$ 2,000**

State reason for this request:

To allocate District III Rec Funds for a Tennis Backboard for Fidelis Tennis Courts.

Requested by: Tammy Simmons/s/

BUDGET DIRECTOR ACTION — DOCUMENT NO. **2016-102**

Budget Updated: _____ Allowed: _____ Forwarded: _____ Returned: _____

Comment: _____ _____

BUDGET DIRECTOR

BUDGET COMMITTEE ACTION — DATE: February 8, 2016

Approved: ____ Hold: ____ Withdrawn: ____ Comment: _____

PASSED AND ADOPTED by the Board of County Commissioners of Santa Rosa County, Florida on this 11th day of ***February, 2016.***

ATTESTED: _____

CHAIRMAN

_____

CLERK OF THE COURTS

Jayne Bell

From: Stephen Furman
Sent: Wednesday, February 03, 2016 10:31 AM
To: Jayne Bell
Subject: RE: Budget Amendment request: Fidelis Tennis Court

Is there enough info in Tammy's email below for you to do the BA?

Stephen

From: Jayne Bell
Sent: Wednesday, February 03, 2016 10:26 AM
To: Stephen Furman <StephenF@santarosa.fl.gov>
Subject: RE: Budget Amendment request: Fidelis Tennis Court

No bring it on.

From: Stephen Furman
Sent: Wednesday, February 03, 2016 10:20 AM
To: Jayne Bell; Henry Brewton
Cc: Tammy Simmons
Subject: FW: Budget Amendment request: Fidelis Tennis Court

Jayne, is it too late to get an additional BA added to next week's agenda for the item below?

Thanks,

Stephen

From: Tammy Simmons
Sent: Wednesday, February 03, 2016 10:14 AM
To: Stephen Furman <StephenF@santarosa.fl.gov>
Subject: Budget Amendment request: Fidelis Tennis Court

Request a budget amendment in the amount of $2,000 to allocate District 3 Recreation Funds for a Tennis Backboard for the Fidelis Tennis Courts; funds to be transferred to 2600-564001.

From: Commissioner Salter
Sent: Monday, September 21, 2015 5:10 PM
To: Tammy Simmons
Subject: Re: Fidelis Tennis Court

OK on the backboard.

Sent from my iPhone

On Sep 21, 2015, at 11:05 AM, Tammy Simmons <TammyS@santarosa.fl.gov> wrote:

I have a request from Rosana Locklin (850-675-2661) to place a tennis backboard up at the tennis courts at Fidelis. The cost could be $1400 to $2000, depending on freight and installation. What are your thoughts on this?

<image001.jpg>

Bakko Economy Flat Series Tennis Backboard (8 X 12)

Part Number:ECO812
<image002.png>
0 Review(s) Read Reviews
0

Price

Your Price:$1,403.00
~~Retail Price:$1,700.00~~
Your Savings:$297.00(17%)
Availability:

You must contact us for a shipping rate!
Quantity Add to Cart
More Sharing ServicesShare | Share on twitter

- Description
- Customer Reviews
- Specifications
- Installation Instructions
- Backboard Placement
- Backboard Comparison

Description
Visually looks like the 8' Slimline Flat series. Each panel contains sound deadening interior (no metal interior frame) and is encased in the same outer fiberglass and gel coat shell coated with Imron paint. Three horizontal rows of pressure treated 2 X 4's (provided) are mounted to fence posts. Holes are the drilled through panels at appropriate heights (instructions explain this) and attach panels with provided green faced bolts.

Installation requires more carpentry skills, however it remains very simple and quick to mount. Although not as quiet as our other backboard's, it is quieter than an average wood backboard. It looks much better and does not fade, warp, peel or rot in 2-3 years like wood backboards. Economy series is competitive in price when factoring cost of materials, design and construction, filling, paint/repainting, installation and labor of a wood backboard. Economy series is often sold for driveways and backyards but requires mounting 2 or 3 standard fence posts in the ground. Space required: Width of backboard and length of 40' (service practice requires 39' , distance from service-line to backboard). Typically purchased by budget conscious court owners, driveways, schools and parks where noise is not a major issue.

ALL BACKBOARDS ARE MADE TO ORDER. PLEASE ALLOW 4 - 5 WEEKS FROM TIME OF PURCHASE FOR DELIVERY, DUE TO THE LENGTH OF THE MANUFACTURING PROCESS.

IMPORTANT SHIPPING INFORMATION, PLEASE READ!

All backboards are shipped via common carrier freight lines to curbside only for residential deliveries. Customer is responsible for unloading of the backboard from the truck. You will be contacted by email as to the delivery date and should be prepared to have people on hand for unloading and moving to your desired location.

This item exceeds the UPS weight and/or length restrictions

You must Contact Us for a freight rate!

Please tell us the model/item you would like, the Zip Code it will be shipped to, whether or not if it is a residence or business, and we will get you a firm freight cost.

Tammy C. Simmons
Santa Rosa County Board of County Commissioners
Administrative Services Manager
6075 Old Bagdad Highway
Milton, FL 32583
850-983-1858 Phone
850-623-1331 Fax

Florida has a very broad Public Records Law. Virtually all written communications to or from Santa Rosa County Personnel are public records available to the public and media upon request. E-mail sent or received on the county system will be considered public and will only be withheld from disclosure if deemed confidential pursuant to State Law.

Budget Item 8

98-091
Form 84001 Rev 8/10/92

BUDGET MODIFICATION RESOLUTION

No.

Whereas, the Board of County Commissioners has determined that a need exists to amend the budget pursuant to Florida Statute 129.06.
NOW, THEREFORE, The Board of County Commissioners of Santa Rosa County, Florida does make the following budget amendments:

REQUESTER ACTION DATE: February 4, 2016

FROM:	**Dist. 3 Capital Fund**	ADDITION:
TO:	Board of County Commissioners	MODIFICATION: X
VIA:	Budget Director	DELETION:
SUBJ:	Request Approval of the following	OVERDRAFT:

	Line Item Number	**Description**	**Amount**
From:	**2323 – 599001**	**Dist. 3 Project Fund Reserves**	**($ 25,000)**
To:	**2323 – 5810011**	**Aid to Municipalities**	**$ 25,000**

State reason for this request:

Funds the redesign for current and future needs of the Bray-Hendricks Park in the Town of Jay from Dist. 3 Recreation Funds.

Requested by: Jayne Bell/s/

BUDGET DIRECTOR ACTION DOCUMENT NO. **2016-103**

Budget Updated: _____ Allowed: _____ Forwarded: _____ Returned: _____

Comment: _____ _____
BUDGET DIRECTOR

BUDGET COMMITTEE ACTION DATE: February 8, 2016

Approved: ___ Hold: ___ Withdrawn: ___ Comment: _____

PASSED AND ADOPTED by the Board of County Commissioners of Santa Rosa County, Florida on this ***11th*** *day Of* ***February, 2016.***

ATTESTED: _____
CHAIRMAN

_____
CLERK OF THE COURTS

Town of Jay

3695 HIGHWAY 4
P.O. BOX 66
JAY, FLORIDA 32565
PHONE (850) 675-4556
FAX (850) 675-6539

KURVIN QUALLS, Mayor
LINDA CARDEN, MMC, Clerk

Council

CHARLES "Chubby" HAVEARD
JANE A. HAYES
MAXINE M. IVEY
SHON O. OWENS

January 21, 2016

Don Salter, S.R. County Commissioner
Milton, Florida

Dear Mr. Salter:

The Town of Jay would like to request a $25,000.00 allocation to help assess the redesign for current and future needs of the Bray-Hendricks Park.

Thanking you in advance for your consideration in this matter.

Linda Carden

Linda Carden
Town Clerk

Budget Item 9

FUNDING PLAN

Navarre Beach Restoration Project

February 4, 2016

Executive Summary

In 2006 Santa Rosa County (County) completed the initial restoration of Navarre Beach via placement of almost 3 million cubic yards of sand along 4.1 miles of beach. At this time, the County has formulated a design, obtained permits, obtained competitive bids, and awarded a construction contract to provide for re-nourishment to maintain the beach and dune (Project). This document addresses potential funding sources and a proposed Municipal Services Benefit Unit (MSBU) for the Project – for which construction is expected to begin in April 2016. The Project entails placement of about 1.6 million cubic yards of sand over the 4.1 miles of shoreline restored in 2006. The Project's estimated construction cost – based on 2014 beach conditions - is $17,361,246– including construction, contingencies, engineering, and administration. Additional costs are associated with MSBU administrative costs and future monitoring costs, which yield the total estimated present value of the Project at $17,803,526.

Future Federal funding is possible as an "individual project authorization" via a ten step process by and between the County, the US Congress, and the U.S. Army Corps of Engineers. However, the ten step process would likely require a minimum of 9 years – with no guarantee of federal funding for future maintenance of the Project. Federal funding is also available from the Federal Emergency Management Agency (FEMA) to repair specific storm damage to an "engineered beach" such as the 2006 Navarre Beach project. The County has secured a commitment of $2,317,187 from FEMA to offset erosion due to Hurricanes Debby and Isaac.

The State of Florida funded 58% of construction costs for the 2006 initial restoration project. State funding for beach projects is awarded on a competitive basis and is limited by the appropriations of the Florida legislature. The County has applied for State funding for this Project at 50% of non-federal costs - the maximum under State rules via the State's Beach Management Funding Assistance Program (BMFAP) administered by the Florida Department of Environmental Protection (FDEP). The 2015 legislative session resulted in a $2.75 million appropriation for the Project; potential additional State funding is subject to a future legislative appropriation for the Project and acceptance by the Governor.

In concert with FEMA and FDEP funding, the required local share of construction costs is $12,491,238. Local funding options for the Project include: General Fund revenues, increasing the Transient Tax, an MSBU, a Navarre Bridge toll, and an increase of the County's sales surtax. To generate the local share of Project costs, the County Commission, at their meetings in the summer of 2014 and of February 12, August 13, 2015 identified:

- the County's commitment to annually contribute approximately $350,000 from the Santa Rosa County Tourist Development Council (TDC) - funded by transient taxes [This is considered a $2.8M contribution over the eight years of the expected Project life.]
- the County's intent to contribute 50% of the local Project construction costs – after the TDC contribution, and
- an MSBU is the local funding mechanism to generate the balance of local Project costs.

The entire local share of construction costs is to be provided by the County as a loan or other funding mechanism to be repaid via the TDC funding and the MSBU.

The present value of the Project construction and future monitoring costs is estimated at $17,803,526. With contributions from FEMA, FDEP, and TDC totaling $7,820,008, the balance of these costs to be addressed locally is $9,983,518. The table below summarizes annual costs, the benefit zones and annual assessments under the proposed MSBU to cover the remaining 50% of local Project construction and monitoring costs after the TDC contribution by the County plus MSBU administration costs; this table is based upon updated property conditions and recreational benefits.

	MSBU Annual Costs			Number of	Annual Contributions		
Benefit Zone	Amount	% of Total	of MSBU	Contributors	Average	Maximum	Minimum
Core Area	$444,945	16.4%	58.3%	939	$474	$38,316	$243
Western Gulf-front	$110,083	4.0%	14.4%	257	$428	$1,008	$86
Non Gulf-front	$207,548	7.6%	27.2%	1,100	$189	$189	$189
Total:	$762,576	28.0%	100%	2,296	$332	$38,316	$86

Table of Contents

1.0 Project Overview 1
1.1 General 1
1.2 Project Purpose 2
1.3 Project Description 2
1.4 Project Costs 2
2.0 Project Funding Alternatives Summary 3
2.1 Federal Funding 3
2.2 State Funding 7
2.3 Local Funding 9
3.0 Beach Project Funding in Other Florida Communities 16
4.0 Selected Funding Alternative 16
5.0 MSBU 17
6.0 References 23

List of Tables

Table 1 – Summary of Construction Costs 3
Table 2 – 2005 MSBU Benefits by Zone 13
Table 3 – Beach Project Funding in Other Florida Communities 16
Table 4 – Funding Sources to offset Construction Costs 16
Table 5 - Summary of Local Funding Sources for Construction 17
Table 6 – Benefit Zones 17
Table 7 – Recreational Benefits Distribution 19
Table 8 – Updated Annual Benefits Distribution 20
Table 9—Distribution of Total Costs 20
Table 10 – Amortization of MSBU Share of Costs 21
Table 11 – Core Area Zone – Points System 22
Table 12 – Western Gulf-front Zone – Points System 22
Table 13- Summary of Individual Average Annual Assessments 22

1.0 Project Overview

1.1 General

This document summarizes the benefits, costs, potential and proposed funding sources, and associated proposed local assessments for the first maintenance nourishment of the Navarre Beach Restoration Project (Project) by Santa Rosa County (County). Local assessments are proposed to be made under the auspices of a Municipal Services Benefit Unit (MSBU).

The MSBU assessment methodology proposed herein is an updated version of that employed to fund the initial restoration of Navarre Beach constructed in 2006. Costs are assessed in proportion to benefits received. Benefits include storm damage reduction benefits and recreation benefits.

A Municipal Services Benefit Unit (MSBU) is proposed to be created to collect funds to the Project based on benefits received by property owners within Navarre Beach. Through the MSBU, property owners pay a share of Project costs in proportion to their benefits received. This report presents the Project benefits to specific properties in the Project area and the associated property assessments to generate the local cost of the Project as may be realized through an MSBU.

A key distinction is that in 2006, the State of Florida fully funded the eastern portion of the current Project area, which was then a State Park and is now the Santa Rosa County Navarre Beach Marine Park (County Park). The 2005 MSBU study did not include the State Park, which was subsequently added to the initial 2006 construction at the State's request.

This report and the associated MSBU assessments reflect:

a) updated property characteristics within the MSBU boundaries;
b) updated recreational benefits attributable to the County Park ; and
c) expected Project costs.

As permitted by the Florida Department of Environmental Protection (FDEP) and the U.S. Army Corps of Engineers (USACE), the Project is proposed to entail placement of approximately 1.6 million cubic yards of beach compatible sand with native dune vegetation to restore the beach-dune system over 4.1 miles of shoreline fronting Navarre Beach, Florida. The Project area extends <u>from</u> (a) the western limits of Navarre Beach abutting the Gulf Islands National Seashore – at 460 feet east of survey reference monument R-192 <u>to</u> (b) the County Park - at 500 feet east of R-213.5. Sand is proposed to be excavated from the offshore borrow area approximately 4 miles offshore as previously used for the 2006 initial restoration, and transported to the beach via hopper dredge, where the sand is to be hydraulically pumped to the beach via temporary pipelines placed on the Gulf bottom.

1.2 Project Purpose

The Florida Department of Environmental Protection (FDEP) has classified Navarre Beach as "critically eroded." Santa Rosa County's Gulf of Mexico coastline is a valuable resource providing storm protection, recreation, economic value, and wildlife habitat. The purpose of the proposed Project is to:

- mitigate historic and/or future storm induced erosion impacts;
- provide an increased measure of storm protection to upland improvements;
- enhance the beach and beach access for public recreational use; and
- restore and maintain the beach for marine turtle nesting habitat, marine life, beach mice and shore birds.

1.3 Project Description

The County proposes a beach berm and dune re-nourishment project to meet the Project purpose. The proposed Project entails restoration of the following elements:

a) a dune with a 30 foot wide dune crest at elevation of +14.2' NAVD and with water-ward and landward slopes of 1V:5H;
b) a primary beach berm at elevation +8.7' NAVD with a seaward slope of 1V:10H; and
c) a secondary beach berm at elevation +4.7' NAVD with a seaward slope of 1V:10H.

1.4 Project Costs

Construction costs as bid are at $15.78 million. Table 1 summarizes costs for construction of the proposed Project – based upon the Project's Final Design and including Engineering & Administration and a 10% Contingency. These costs do not include future monitoring costs or MSBU administrative costs. Bids were obtained in December 2015.

In addition to the Project construction costs, the County is required by FDEP to monitor the Project for 7 years. Monitoring during construction and the year immediately following construction is included in the "Engineering & Administration" costs in Table 1. For the subsequent two years after construction, monitoring is estimated to cost $110,000 per year; in the subsequent fifth and seventh years after construction, monitoring is estimated to cost $40,000 per year. Note that in the subsequent fourth and sixth years after construction, no monitoring is required. FDEP is expected to cost-share at a rate of 50% for these monitoring costs. The present value of these monitoring costs is $355,000.

Probable Construction Costs						
Item	Description	Quantity		Unit Price		Cost
1	Mobilization/Demobilization	1	LS	$2,950,000	LS	$2,950,000
2	Furnish & Install Sand	1,600,000	cy	$7.25	/cy	$11,600,000
3.1	Permit Compliance Including Turbidity Monitoring	1	LS	$75,000	LS	$75,000
3.2	Dredge Standby	15	hours	$6,500	/hour	$97,500
4	Beach Tilling	132	acres	$650	/acre	$85,800
5	Furnish & Install Native Plants	112,000	plants	$1.00	/plant	$112,000
					Total Construction Cost:	$14,920,300
					Engineering & Administration:	$862,651
					Sub-total Cost:	$15,782,951
					Contingency:	$1,578,295
					Total Cost:	$17,361,246

Table 1 – Summary of Construction Costs

2.0 Project Funding Alternatives Summary

Potential funding for the Project may be obtained from federal, state & local sources. This section identifies: (a) the advantages and disadvantages of each funding source, and (b) the process, schedule, and feasibility of obtaining funds from each source. Examples from other local communities are compared and contrasted for illustrative purposes.

2.1 Federal Funding

Federal funding for future maintenance of the Project may be obtained via U.S. Congressional appropriation in coordination with the U.S. Army Corps of Engineers (USACE) Mobile District. The USACE is the primary federal entity responsible for the restoration and maintenance of sandy beaches in the United States under the federal Shore Protection Program. The USACE is authorized to perform this function via congressional authorization under the Water Resources Development Act (WRDA), a federal statute which can grant congressional authority for the USACE to assist states and local communities with shoreline protection. Federal funds to support projects authorized under WRDA are typically appropriated annually through the Energy and Water Development Appropriations Act (Congressional Research Service 2013).

Under WRDA, Congressional authorization for a beach erosion project can take two forms. First, Congress has granted the USACE general authority, under the Continuing Authorities Program (CAP), to investigate and construct certain small, one-time projects

that fall within specific categories and budget limits. However, the proposed County Project does not qualify under the CAP because its scope does not fit within any of the nine continuing authority categories. The second form of Congressional authorization under WRDA can come in the form of an "individual project authorization", whereby the USACE is directed to study, design and construct a particular project. A potential funding stream – subject to future Congressional appropriations - is established when individual project authorization is granted. In most cases, the federal commitment to maintain a beach is authorized as an "individual project authorization," which provides authorization for typically 50 years (project life) of federal participation – in partnership with the non-federal local sponsor. Projects must have three components to receive an "individual project authorization" from Congress:

1. A willing non-federal sponsor – such as a state or local government to share in the cost of the project. Note: federal assistance is limited to 65% of project construction costs – unless an increased federal share is justified (for federal lands or via a Section 111 Study to mitigate navigation impacts).
2. A clear public benefit – the restored portion must have sufficient public access and provide substantial storm damage reduction benefits to upland properties and infrastructure.
3. Economic justification – USACE must determine that benefits of the project exceed project costs.

The existing restored beach and dune provide substantial protection to upland property. It is expected that substantial storm damage reduction benefits to potentially justify a federal project for Navarre Beach might only be realized if the USACE considers the "no project" condition to be that associated with beach conditions prior to the 2006 initial restoration project; this consideration is subject to USACE discretion.

The federal Shore Protection Program is currently under review and will very likely be revised. As identified by Tab Brown, P.E. Chief, of the USACE's Planning and Policy Division at the February 2013 American Shore & Beach Preservation Association Summit, in Washington D.C.:

- A key focus for the USACE is towards "Integrated Water Resources Management – initially via the proposed $20M "Comprehensive Approach Study", which will allow the USACE to potentially formulate a new way of doing projects – even potentially including:
    - collaboration or with support from NOAA and the Federal Emergency Management Agency (FEMA),
    - a "systems based" approach for the basin and ecosystem,
    - risk-informed decision making and communication,
    - "asset management" – indicated in the form of prioritization of projects & funding,
    - "re-purpose" of existing projects.
- "Non-federal shares are subject to sequestration"; however, it is not certain as to whether this means (a) the Project scope will be reduced, (b) the non-federal share will increase or (c) whether it means something else.

- The Corps is "looking at" 30± feasibility studies that have "been around" for 20+ years.
- It remains a “No Earmark” political environment:
    - The USACE intends to continue its focus on “3-3-3” projects that can be completed within 3 years at a federal cost under $3M with a design document less than 3 inches thick.
    - The partial basis of decision making will be outside the Districts at Division and Headquarters – to “maximize the value to the nation” – the key to prioritization.
- 50% of U.S. infrastructure is at least 50 years old; the USACE will either “re-up authorization” or “de-commission” USACE projects.

Advantages of Federal Funding:

- Authorization of the Project as an “individual project” provides substantial savings to the County (up to 65% of Project construction costs)
- Authorization would provide long-term funding to the Project subject to Congressional appropriations for up to 50 years.
- Coordination with the USACE brings federal experience and additional expertise to the Project.

Disadvantages of Federal Funding:

- The process to obtain authorization typically takes at least 10 years and may take longer. The USACE‘s “3-3-3” program is aimed at reducing the length of the Feasibility Phase; however, this initiative is less than 3 years old and its effect is not yet conclusive.
- Coordination with the USACE during the Feasibility Study and after authorization of the Project requires compliance with federal rules and regulations which may be cumbersome for the County, including compliance with the National Environmental Policy Act of 1969 and the 1983 Principles and Guidelines for Water and Related Resources Implementation Studies.
- County objectives or priorities may be difficult to assure because the County can lose autonomy by having to share control of the Project with the USACE under federal regulations.
- Federal appropriations have historically been limited by the Office of Management & Budget, the federal budget deficit, and related politics.
- Largely undeveloped areas – included in the Coastal Barrier Resources System (CBRA Zones), including Navarre Beach County Park – are not eligible for federal funding. This area is approximately 3,700 linear feet (or approximately 17%) of the total Project shoreline.

Process & Schedule to Obtain Federal Funds

In general, there are ten steps to obtaining individual project authorization from Congress:

1. Problem Perception – by local sponsor
2. Request for Federal Action – by local sponsor
3. Congressional Approval for Reconnaissance Study – by Congress
4. Reconnaissance Study – 1 year average duration – by the USACE
5. Authorization & Appropriation for Feasibility Study – by Congress
6. Federal Feasibility Study – 3 year average duration – by the USACE
7. Congressional Authorization – by Congress
8. Pre-Construction Engineering & Design – 2 years average duration – by the USACE
9. Congressional Appropriation – by Congress
10. Project Implementation – by the USACE

Potential Federal Funding Level: Federal funding might be obtained at the following percentages for the various stages of development of a federal project:

- 100% of reconnaissance;
- 50% of feasibility;
- 65% (maximum) of construction

Likely Timing for Federal Funding: If a federal project is pursued in early 2016, construction of the federal project might occur in 9 years, by 2025 at the soonest – including:

- 1 year to obtain Congressional Appropriation for Reconnaissance Study,
- 1 year to conclude Reconnaissance Study,
- 1 year to obtain Congressional authorization for Feasibility Study,
- 3 years to complete Feasibility Study,
- 2 years to complete Pre-Construction Engineering & Design,
- at least 1 year to obtain Congressional Authorization & Appropriation for construction.

Approximately 33% of all Reconnaissance Studies lead to Feasibility Studies and approximately half of those (16% of all Reconnaissance Studies) lead to constructed projects (Congressional Research Service, 2013). Additionally, the USACE project approval process has outpaced appropriations for approved projects to the point there are currently more than 1,000 authorized studies and construction projects, nationwide, with no Congressional appropriations to implement the projects.

For comparison, two other Florida counties are in the midst of obtaining a federal project as described below:

Walton County requested and received authorization for a federal Reconnaissance Study in the summer of 2002. The Reconnaissance Study was concluded in 2003 and the Feasibility Study began in 2004. The hurricane seasons of 2004 and 2005

"upended" the Feasibility Study to the point that the final Chief's Report to favorably conclude the Feasibility Study wasn't executed until July 2013. Walton County completed Pre-Construction Engineering & Design (Step 8 above) and Congressional Appropriation (Step 9); project implementation is pending.

St. Lucie County (in southeastern Florida) requested a federal Reconnaissance Study in 1998. St. Lucie County obtained Congressional approval for its Reconnaissance Study in 2001 and the Study was completed in 2004. The Feasibility Study was authorized and is currently expected to be completed by 2016 or later.

Two final points should be made about federal funding. First, it should be noted that FEMA may provide federal funds to rebuild or repair the beach following damage from a storm event, given the appropriate conditions for FEMA funding are met – for an "engineered beach" – whether or not federal funding is obtained through the USACE. Specifically, a beach, such as the 2006 Navarre Beach project, meets the appropriate conditions when, consistent with the Code of Federal Regulations (44 CFR §206.226(j)(2)):

- The beach was constructed using imported sand.
- A maintenance plan was established and followed.
- The maintenance program preserves the original design.

The County has secured a commitment of $2,317,187.24 from FEMA to offset erosion in the Project area attributable to Hurricanes Debby and Isaac. These federal FEMA funds are expected to be applied against the cost of the Project.

Second, it should be noted that the USACE is in what some call an "Evolving Demands" phase, which began in 2001 (Congressional Research Service 2013). This phase is characterized by a convergence of aging USACE infrastructure and expanded mandates, including for ecosystem restoration. This evolution's impact on authorization of shore protection projects, such as the Navarre Beach Project, cannot be confidently predicted. Regardless, a requirement for any federal project authorization is support from a community's Congressional delegation.

2.2 State Funding

In general, State of Florida funding for the Project may be obtained via Florida Legislature appropriation via FDEP's Beach Erosion Control Program established in 1964; this FDEP Program coordinates with local and federal governments to achieve the protection, preservation and restoration of the coastal sandy beach resources of the State. The Program provides financial assistance for eligible Project activities, including beach restoration and nourishment, Project design, engineering studies, environmental studies, environmental & physical monitoring, inlet management planning, inlet sand transfer, dune restoration and protection activities, and other beach erosion prevention activities which are found to be consistent with the adopted State Strategic Beach Management Plan – such as for Navarre Beach. The program is authorized by Section 161.101 of Florida

Statutes (FS) and details of the program rules and regulations are prescribed by Chapter 62B-36 of Florida Administrative Code (FAC), which was recently revised and went into effect on August 5, 2013.

In general, a proposed project must compete with projects as proposed by other local governments for the limited amount of funding appropriated by the Florida Legislature. Chapter 62B-36.006, FAC, outlines criteria for the ranking of projects via points. There are twelve criteria, each with a maximum point award ranging from five to twenty points. The nine most significant criteria (i.e. worth a maximum ten to twenty points) are: severity of erosion, threat to upland structures, recreational and economic benefits, availability of federal funds, local sponsor financial and administrative commitment, previous state commitment, project performance, mitigation of inlet effects, and significance (or length).

Chapter 62B-36.007 of FAC provides the criteria to determine how much of a project may be funded by the state. The state provides financial assistance for up to 50% of eligible beach project costs – not covered by federal funding. The proportion of costs shared by the State is based on the amount of public access (or "eligible shoreline") within the project area. Chapter 62B-36.007(1)(e), FAC, states, "The sum of the eligible shoreline lengths…is divided by the total project length to determine the percentage of the total project that is eligible for state cost sharing." Through County beach access improvements and the acquisition of the former Navarre Beach State Park, 50% of the Project shoreline has public access per State criteria and potential State funding for the Project is estimated at 50% of eligible Project costs.

Advantages of State funding:

- Cost sharing typically ranges up to 50% of the non-federal Project costs – where public access criteria are met.
- Permitting of a project may be facilitated by FDEP's recognition of the project need reflected in State funding.
- Inclusion of the Project in the Beach Erosion Control Program (as for the Navarre Beach Project) can provide potential long-term funding.

Disadvantages of State funding:

- The Project must be implemented under the auspices of an agreement with FDEP consistent with the timing of the state's budget and funding process.
- Legislative appropriations have given greater weight to projects with federal funding.

Process & Schedule to Obtain Funds

In general, there are five steps to obtain state cost sharing, each occurring on an annual basis:

1. Application for FDEP Erosion Control Program Funds – typically due in September prior to the Legislative session.
2. FDEP Staff Review and ranking – typically produced in December or January

3. Inclusion of project in FDEP Strategic Budget Plan – typically produced in January or February.
4. State Legislative Appropriation – typically concluded by May.
5. Final FDEP Action via Execution of a project agreement with the local sponsor (County) – typically executed before the beginning of the fiscal year on July 1st.

For this Project, the County has completed Steps 1- 4, resulting in a FY2015/16 appropriation of $2.75 million. Approximately $200,000 will be used for Project design and permitting; $2.55 million will be allocated to Project construction. Step 5 will be completed in the near future.

It should be noted that the State Legislative Appropriation was not consistent with the FDEP Strategic Budget Plan. In the Strategic Budget Plan the Project ranked 18th out of 40 projects and would have required an appropriation of at least $45 million to fund this Project and all the projects ranked higher. The total appropriation for beach projects in the FY2015/16 budget was just over $32 million and many projects ranked above this Project were not funded. The County intends to continue applying for State funds for reimbursement of up to 50% of eligible Project construction costs.

Potential State Funding Level: Up to 50% of eligible Project costs might be obtained from the State.

Likely Timing for State Funding: $2.55 million is dedicated for construction of this Project; additional State funding for the Project may be obtained as soon as July 2016.

2.3 Local Funding

With or without federal or state funding, a local share of Project costs is required to construct the Project. Approximately $3.8M or $600,000 per year (annualized) will be required from a local source of funds; this local share of costs is based upon the following assumptions:

- Federal FEMA funding is secured to offset the impacts of both Hurricanes Debby and Isaac – in the amount of $2,317,187.
- No more State funding is secured for construction; 50% of monitoring costs is funded by the State.
- The County contributes 50% ($3,910,112) of remaining Project costs after FEMA, State, and TDC funding – for County-owned lands consistent with the 2006 initial restoration project and the addition of benefits associated with the former state park.
- The balance of Project costs ($3,910,111) is generated from a local funding source.

In general, local funding for the Project may be obtained via five possible revenue streams:

- County's General Fund (revenue);
- Transient Tax increase;

- Creation of a Municipal Services Benefit Unit;
- Navarre Beach Bridge toll; or
- Sales Surtax increase.

Each of the above potential local funding sources is described below:

2.3.1 General Fund

The County's operating or "general government" budget revenue has three primary sources: (a) ad valorem taxes, (b) state shared revenues, and (c) locally generated revenues (Santa Rosa County 2013). Combined, these revenue sources were projected to increase by a total of $1.3 million dollars in FY 2013-2014 over the previous year. FY 2013-2014 was the first year property values (and subsequent ad valorem revenues) increased since 2008. FY 2013-2014 was also the first year in the past seven years that the Santa Rosa County constitutional officers requested merit and cost-of-living salary increases for their staff; however, the modest increase in expected revenues was not sufficient for the County Administrator to recommend the requested merit and cost-of-living salary increases to the County Commission. In adopting the FY 2013-2014 Budget, the County Commission chose to keep the previous year's millage rate of 6.0953. Based upon the above, the County's General Fund may be a viable source for the Project, but could be problematic due to the downward trend in ad valorem tax collections of the past years and competing County needs.

Ms. Linda Coley, President of the Navarre Beach Leaseholders and Residents Association (NBLRA), conveyed by email of December 4, 2013 that:

- Use of General Revenue is considered by the Leaseholders to be the "fairest" alternative to fund the Project.
- NBLRA members have "calculated that if you add Beach Restoration as a line item to the General Fund with a millage rate of .0003 mils for the entire county, it would produce more than 2.5 million dollars in revenue each year."
- "If this line item is preserved and the funds only used for the Beach then each citizen of the county would pay a very small amount to preserve and improve the major driver of Tourist dollars" within the County.
- "This millage rate could even be lower if used in combination with some of the other funding ideas such as Beach Toll, Parking fees, income from the Pier and TDC money."

Advantages of General Revenue

- Use of General Revenue would spread the Project costs to all County residents thereby imposing a relatively small cost upon individual property owners.
- The NBLRA has conveyed that use of General Revenue is considered by the Leaseholders to be the "fairest" alternative to fund the Project.

Disadvantages of General Revenue

- General Revenue funding for competing County needs may need to be reduced and/or the mileage rate may need to be increased.
- County property owners outside of Santa Rosa Island may object to contributing funds for the Project.

Process & Schedule for Obtaining Funds

Funding for the Project via General Revenue requires approval by the County Commission.

Potential General Revenue Funding Level: General Revenue could potentially yield all needed local funds for the Project.

Likely Timing for General Revenue Tax Funding: The County Commission will need to approve use of General Revenue in concert with formulation of the annual County budget before October 2016 in order to start collecting funds at the beginning of October 2016 – for FY 2016/17.

2.3.2 Transient Tax

Section 125.0104, FS, authorizes counties to levy a tourist development tax or a "transient tax" – commonly referred to as a "tourist tax". Funds from this transient tax may be used for the capital construction of tourist-related facilities, tourist promotion and beach and shoreline maintenance.

Transient tax rates vary by county and depend on the county's eligibility and will to levy particular taxes; however, the absolute maximum rate is 6% for eligible counties, levied on lodging accommodations rented for six months or less. Santa Rosa County is eligible to impose up to 5%. Since 1994, Santa Rosa County has been administering and collecting transient taxes (http://dor.myflorida.com/dor/taxes/pdf/dr15tdt.pdf). Historically, Santa Rosa County's transient tax rate was set at 4% and the County has allocated the funds to other County interests.

The County Commission approved the addition of an additional 1 cent transient tax (for a total of 5 cents per dollar) to dedicate to beach maintenance. The expected revenue from the additional 1 cent transient tax is about $350,000 per year – to yield total annual transient tax revenue at about $1.5 million per year.

Advantages of the Transient Tax

- Use of transient tax funds for the Project would provide funding by key beneficiaries of the restored beach – tourists, who visit and stay in Navarre Beach and use the beach for recreation.

Disadvantages of the Transient Tax

- The County has maximized its current transient tax authority per Florida Statute, no other transient tax increases are available to address other future County needs that may arise.

Process & Schedule for Obtaining Funds
Funding for the Project via the transient tax will require approval by the County Commission.

Potential Transient Tax Funding Level: The 1¢ transient tax will likely yield $350,000 per year.

Likely Timing for Transient Tax Funding: The County Commission approved the additional transient tax.

2.3.3 MSBU
Under Chapter 125.01(1)(q), FS, a county is authorized to "establish…municipal service taxing or benefit units for any part or all of the unincorporated area of the county, within which may be provided…beach erosion control…and other essential facilities and municipal services from funds derived from service charges, special assessments, or taxes within such unit only." Municipal Service Benefit Units (MSBUs) are commonly used in Florida communities for the purpose of funding projects that have a clear benefit area.

As identified in section 1.1 above, 38% of the initial 2006 beach restoration project was funded by an MSBU which covered Navarre Beach properties.

Consistent with the initial project's MSBU, several court rulings, and guidance from the Florida Attorney General, MSBUs have four common characteristics:

1. A MSBU is created and managed by the governing body of the county, the Board of County Commissioners. A public referendum may be employed to adopt a MSBU but is not required.
2. The boundaries of a MSBU may include all or part of the boundaries of a county or municipality.
3. The special assessments within a MSBU boundary are not required to be uniform but must be reasonably related to the benefit accruing to the property from the constructed project or service provided.
4. The governing body has broad discretion in identifying the benefits of a project and in developing a methodology to apportion the benefits and assessments among the properties in the MSBU.

MSBU creation and assessment requires identification of benefits received by properties within the MSBU boundary. Beach and dune restoration projects have historically identified two over-arching benefits to the properties within the MSBU boundaries: (1) storm damage reduction benefits; and (2) recreational benefits. Storm damage reduction (SDR) benefits result from the presence of a wider, more stable beach which is expected to reduce damages during future probable storm events; the closer a structure is to the beach, the greater storm damage reduction benefit it receives. Recreational (REC) benefits result from the availability of additional recreational space at the beach as a result of the Project. These Project benefits were previously estimated for the Project

area excluding the County Park – by benefit zones for the establishment of the 2005 MSBU to support the 2006 initial construction - as summarized in Table 2, where:

- Core Area constitutes that portion of the shoreline west of the fishing pier and dominated by high-rise and mid-rise multi-family buildings and hotels,
- Western Gulf-front constitutes that portion of the shoreline dominated by single-family homes, and
- Non Gulf-front constitutes those Santa Rosa Island properties which are not immediately adjacent to the beach.

	SDR	REC	Total
Benefit Zone	Percent	Percent	Percent
County Lands	0.0%	12.0%	10.4%
Core Area	86.7%	67.2%	69.8%
Western Gulf-front	13.3%	15.1%	14.8%
Non Gulf-front	0.0%	5.8%	5.0%
Total :	100.0%	100.0%	100.0%

Table 2 – 2005 MSBU Benefits by Zone

In 2014, the Navarre Beach Leaseholders and Residents Association (NBLRA) conducted an email survey of residents. The survey revealed that: “NO one is in favor of another MSBU for just the Leaseholders of the Beach” (NBLRA, 2013). NBLRA has identified that they “feel like it is only fair that the entire county take an equal part to fund this project.” In addition, NBLRA has identified the need for a permanent funding mechanism.

Advantages of MSBU

- MSBUs are an established and legally recognized method to raise local funds for beach and dune restoration projects in Florida.
- MSBUs fairly and reasonably distribute the local costs of the Project to the real property owners specially benefitted by the Project.
- MSBUs provide a mechanism to meet specific financial needs of the Project.
- MSBUs are flexible and provide counties with discretion to tailor the MSBU to meet unique circumstances of the Project.

Disadvantages of MSBU

- MSBUs may face challenges from affected landowners who disagree with the Project or the cost apportionment methodology.

Process & Schedule for Obtaining MSBU Funds

Typically, a MSBU is initiated by a request from a group of interested residents or county staff. Timing of MSBU creation is variable and dependent on the county’s chosen path for implementation, and the desired level of public coordination associated with the Project.

Potential MSBU Funding Level: There is no legal limit. Final amount is usually designed to supplement Project funding needs to 100%, after federal, state and other sources have been exhausted.

Likely Timing for MSBU: 6 months – 1 year from implementation. Assessments typically span the Project construction life (estimated at 8 years).

2.3.4 Navarre Bridge Toll

The Florida Department of Transportation (FDOT) constructed, maintained and collected tolls on the Navarre Bridge from 1960 to 2005. Currently the bridge is owned and maintained by the County. Preparation of the Feasibility Study for the initial project explored the possibility of adding a surcharge to the already-collected toll. At the time of the 2000 Feasibility Study, data on bridge crossings indicated that in 1999, total bridge crossings were estimated at 1,088,000. For illustrative purposes, 1 million crossings per year is assumed to be a conservative estimate. The bridge toll, discontinued in 2005, was $0.50. Assuming a $0.50 toll per crossing at 1 million crossings per year estimates revenues of $500,000. However, operational expenses in 1999, according to an FDOT Toll Revenue and Operation, Maintenance and Improvement table, were $315,899. Maintenance and improvement costs were separately listed and for the purposes of this illustration will be ignored, since the County has successfully maintained the bridge since 2005. If the FDOT operational expenses are comparable to what the County's expenses may be for operating a toll on the Navarre Bridge, annual net revenues of approximately $184,000 may be realized via a $0.50 toll or $684,000 via a $1.00 toll.

Advantages of Bridge Toll

- The County would not have to seek FDOT or Florida Legislative approval to implement the toll – as was the case until 2005.
- A bridge toll appears to obtain Project funds from a wide variety of Project beneficiaries, including residents, workers and tourists of the beach.

Disadvantages of Bridge Toll

- New facilities would need to be constructed to collect the toll.
- Toll revenues may be somewhat unreliable and discourage visitors to Navarre Beach.

Process & Schedule for Obtaining Funds

The County would need to more thoroughly explore the costs associated with construction and operation of toll facilities. If fiscally feasible, the County will need to allocate the funds for construction and operation.

Potential Bridge Toll Funding: Toll funding may range from $184,000 (for a $0.50 toll) to $684,000 (for a $1.00 toll).

Likely Timing for Bridge Toll Funding: Implementation may take 1 to 2 years.

2.3.5 Sales Tax

The State of Florida imposes a 6% sales tax and allows counties a "Local Government Infrastructure Sales Tax", as a discretionary surtax on top of the sales tax, up to 1%, which can be implemented in 0.5% increments. Santa Rosa County currently has a 0.5% sales surtax which was established in 1998 and is set to expire in 2018 (FDOR 2013). Revenue from this 0.5% surtax is currently estimated at approximately $6 million per year (EDR 2013). Imposition of the additional 0.5% discretionary surtax would yield an additional estimated $6 million per year. In "Legal Advisory Opinion Number: AGO 2012-19" issued by the Florida Attorney General, beach erosion control projects were identified as projects that could qualify for use of these funds. Further, the opinion clearly states that use of the funds for this purpose would need to be authorized by a countywide referendum.

Advantages of Sales Surtax:

- The amount of funding generated by the 0.5% minimum increase would produce the greatest annual net revenue of all Local Funding options considered in the this report.

Disadvantages of Sales Surtax:

- A County-wide referendum is required to approve the increase and, if approved, collections would not likely commence until July 2017 with a full year's funding not available until summer 2018.

Process & Schedule for Obtaining Funds

1. The County would need to get the measure approved for balloting by the next election cycle – the next General Election is scheduled for November 2016.
2. If approved by voters, the County would likely start collecting revenues in summer 2017, with a full year's collections ready by summer 2018.

Potential Sales Surtax Funding: The 0.5% increase in sales surtax would generate approximately $6 million/year.

Likely Timing for Sales Surtax Funding: Funding would likely be available by summer 2018.

2.2.6 Summary - Local Funding Options

The five potential local funding alternatives above include:

- County's General Fund – viable but likely problematic
- Transient Tax Increase – estimated at $350,000/year
- MSBU – no pre-determined level (previous MSBU generated $7± million over 8 years)
- Navarre Bridge Toll – estimated up to $684,00/year (assuming a $1.00 toll)
- Sales Surtax – estimated at $6 million/year

The County may pursue all or a combination of the above to meet the Project financial needs.

3.0 Beach Project Funding in Other Florida Communities

Table 3 summarizes funding sources for various ongoing beach nourishment projects in other Florida counties, including whether or not federal and state funding was obtained and how the local share of costs is generated (per telephone conversations with staff or documentation from each county – see Section 6.0 References).

County	Federal	State	Local
Escambia	Yes	Yes	Transient taxes
Okaloosa	No	Yes	Transient taxes & MSBU
Walton	No	Yes	Transient taxes
Bay	Yes	Yes	Transient taxes
Franklin*	No	No	none
St. Lucie	No	Yes	Ad valorem taxes & Erosion District (≈MSBU)
Sarasota	Yes	Yes	Transient taxes

Table 3 – Beach Project Funding in Other Florida Communities

*Franklin County residents voted down a proposed special taxing district and the Alligator Point Project was not constructed.

4.0 Selected Funding Alternative

The County proposes to employ multiple funding sources for the proposed Project. The County specifically proposes to use funds committed by the Federal Emergency Management Agency (FEMA) totaling $2,317,187 to repair past storm damage to the beach and dune constructed in 2006 and $2,552,821 remaining from the 2015 $2.75M appropriation through the State of Florida Beach Management Funding Assistance Program (BMFAP) administered by FDEP. The local share of costs is thus at $12,491,238 as summarized in Table 4.

Table 4 – Funding Sources to offset Construction Costs

Funding Source	Amount
FEMA	$2,317,187
FDEP BMFAP	$2,552,821
Local Sources	$12,491,238
Total:	$17,361,246

To partially address the local share of costs, the County intends to annually contribute $350,000 from the Santa Rosa County Tourist Development Council (TDC) - funded by

transient taxes. This leaves the balance of the local share of Project construction costs at $9,691,238 as reflected in Table 5.

Table 5 - Summary of Local Funding Sources for Construction

Local Share	$12,491,238
Santa Rosa TDC	$2,800,000
Local Share Balance (County & MSBU)	$9,691,238

At their meeting on August 13, 2015, the Board of County Commissioners directed County staff to update the previous 2005 MSBU study to reflect the County and the MSBU splitting the "Local Share Balance" 50/50 and generate the necessary local share of costs to construct the Project and provide for monitoring required by FDEP. The entire local share of construction costs is expected to be provided by the County as a loan or other funding mechanism to be repaid via the TDC funding and the MSBU.

5.0 MSBU

Costs & Benefits: The cost to construct the Project is currently estimated at $17,361,246. The present value of the Project including future monitoring costs is estimated at $17,803,526. With contributions from FEMA, FDEP, and TDC totaling $7,820,008, the balance of costs to be addressed locally is $9,983,518.

The Project results in direct benefits and indirect or secondary benefits. Direct benefits are realized with construction of the Navarre Beach Project through storm damage reduction and increased recreational use of the wider beach that is created by construction of the Project. Secondary benefits are associated with the Project's stimulation of economic activity in the County. Only direct benefits are considered in the formulation of the MSBU described herein. Table 6 summarizes the Benefit Zones considered in concert with formulation of the MSBU. Individual properties in each zone receive comparable benefits based on the nature, value, and location of the improvements on the individual property within the zone.

Table 6 – Benefit Zones

Benefit Zone	Description
County Parks	County Park and all county beach-front lands
Core Area	Gulf-front properties west of the pier and south of Gulf Boulevard from 8649 Gulf Boulevard to 8227 Gulf Boulevard
Western Gulf-front	Gulf-front properties south of Gulf Boulevard from 8213 Gulf Boulevard to 7309 Gulf Boulevard
Non Gulf-front	All properties north of Gulf Boulevard

Storm damage reduction benefits entail reduction of potential damages to upland improvements during storm events due to the protective value of the restored beach. Storm damage reduction benefits are received by developed Gulf-front properties, where potential storm-erosion damage to the structures on the property is significantly reduced by the Project.

Recreation benefits correspond to the value of the increased recreational use associated with the wider, less congested, and more attractive beach constructed by the Project. Recreational benefits are realized by people over a wide geographic area, including but well beyond the Gulf-front properties in Navarre Beach. The people who use the beach for recreation directly receive these benefits. These people include (a) property owners in Navarre Beach, (b) property owners in mainland Santa Rosa County, and (c) visitors to Santa Rosa County.

In general, changes in property ownership and use warrant an update of the distribution of recreational benefits for the 2016 Navarre Beach MSBU. The following describes the updates, as developed in collaboration with Dr. William Stronge of Stronge Consulting, Inc.:

> The original Navarre Beach 2005 MSBU estimated and distributed recreation benefits based on results of a beach user study conducted in 2001 during pre-restoration beach conditions, over 14 years ago. The County's acquisition of the former State park results in expansion of County-owned beachfront property within the Project Area.
>
> The County's acquisition of the former Navarre Beach State Park adds approximately 0.5 miles of Gulf-Front property within the Project area, increasing the project length from 3.6 to 4.1 miles. An increase in recreational benefits is expected to be proportional to the increase in shoreline length; total annual recreational benefits are now estimated at $5,508,785 per year [= $4,836,982*(4.1/3.6)]. It is estimated that most of these benefits will go to island visitors - many who are resident in other parts of Santa Rosa County. It is assumed that this additional recreational benefit accrues to the County.
>
> Recreational benefits within the Core, Western Gulf-front, and Non Gulf-front benefit zones total $4,257,936 annually, based upon prior beach-user surveys. Within each zone recreational benefits are proportional to the number of units within that zone and the property values of those units. The beach is an amenity and Gulf-front properties with greater access to the beach have higher values than those non Gulf-front properties with less access. Parcels within the Non-Gulf-Front zone are expected to have a lower recreational value than the two gulf-front zones, due to the additional travel for users to reach the beach and the associated less frequent use of the beach by these parcels. This difference in recreational benefit value is equivalent to the ratio of average per parcel property values between the Non-Gulf-Front zone and the gulf-front zones. The average per parcel property

value in the Non-Gulf-front zone is 51.37% of the average per parcel property value in the gulf-front zones, based on an analysis of 2015 data. Therefore, the recreational value of a Non-Gulf-front unit is equivalent to 51.37% of a gulf-front unit. The distribution of recreational benefits to the benefit zones is thereby refined to be on the basis of units within the zone, with the Non Gulf-front units factored at 51.37% of the units within the Western Gulf-front and Core benefit zones. Table 7 identifies the distribution of recreational benefits.

Table 7 – Updated Recreational Benefits Distribution

Benefit Zone	# of units		Factored # of units		Recreation Benefits (excluding County & based on Factored Units)
County Parks	N/A		N/A		
Core Area	939	40.9%	939	53.3%	$2,269,048
Western Gulf Front	258	11.2%	258	14.6%	$623,444
Non Gulf-front	1,100	47.9%	565.1	32.1%	$1,365,444
Total Units	2,297	100.0%	1,762.1	100.0%	$4,257,936

Overall, 20.0% percent of the benefits are received by users of County lands that provide beach access including the County Park at the east end of the Project and other beach access sites that front the Gulf. The Project will not provide any significant storm damage prevention benefit to the County Park or County lands. About 46.7% of the benefits of the Project go to the “Core Area” which predominantly contains high-density-residential and commercial buildings. These buildings obtain the overwhelming share of the storm damage prevention benefits (86.7%) as well as just less than one-half of the recreational benefits of the Project (41.2%). The Gulf-front properties on the western portion of the Project are largely single-family residences. These properties receive 11.6% of the benefits of the Project, including 13.3% of the Storm Damage Reduction Benefits and 11.3% of the Recreation Benefits. Finally, the properties in Navarre Beach that are not on the Gulf are expected to receive only recreational benefits which amount to 21.8% of the total Project benefits.

Based on the recreational benefits of County lands within the Project area including the County Park, the updated distribution of local benefits is summarized in Table 8. Additional recreation benefits are updated based on the added beach width within the former state park; these benefits are attributable to visitors and are a County benefit.

Table 8 – Updated Annual Benefits Distribution

	Storm Damage Reduction Benefits		Recreation Benefits		Total Benefits		
Benefit Zone	Amount	Percent	Amount	Percent	Amount	Percent	% in MSBU
County Parks	$0	0.0%	$1,250,849	22.7%	$1,250,849	20.0%	N/A
Core Area	$658,216	86.7%	$2,269,048	41.2%	$2,927,264	46.7%	58.3%
Western Gulf-front	$100,788	13.3%	$623,444	11.3%	$724,232	11.6%	14.4%
Non Gulf-front	$0	0.0%	$1,365,444	24.8%	$1,365,444	21.8%	27.2%
Total:	$759,004	100%	$5,508,785	100%	$6,267,789	100%	100%

Based on the above:

- The Project would annually generate about $6.3 million in direct benefits over the 8-year economic life of the Project. About 87.9% of these benefits are associated with increased recreational value. About 12.1% of these benefits are associated with reduction in storm damages due to the protection provided by the restored beach.
- The County's share is 20.0% of local benefits and costs; however, per the August 13, 2015 Board of County Commissioners meeting, the County will pay 50% ($4,991,759) of the local costs – after the TDC contribution.
- The remaining balance of 50.0% of local costs ($4,991,759) is to be addressed via the MSBU.
- Table 9 summarizes the distribution of all costs (construction, monitoring & MSBU administration) for the Project.

Table 9—Distribution of Total Costs

	Share of Total Cost	
Funding Source	Amount	Percent
State, Federal & TDC Grant	$7,820,008	43.9%
County	$4,991,759	28.0%
MSBU	$4,991,759	28.0%
Total	$17,803,526	100.0%

Table 10 summarizes the amortization of the MSBU share of costs. An annual cost of $766,823.88 is required to be generated by the MSBU.

Table 10 – Amortization of MSBU Share of Costs

Year	Construction Costs	Monitoring Costs	Present Worth
1	$4,889,259	$0	$4,889,259
2		$0	$0
3		$30,934	$27,500
4		$0	$0
5		$12,167	$10,000
6		$0	$0
8		$13,686	$10,000
		Total Present Worth:	$4,936,759.16
		Annual Amortized Project Costs:	$733,246.13
		MSBU & Tax Collector Admin. Fees:	$29,329.85
		Total Annual Cost:	$762,575.98

Points System: Under the MSBU, individual gulf-front property owners would be assessed based on a points system that scores a property based on three property factors:

(1) the number of dwelling units on the property,
(2) the acreage of the property, and
(3) the beach frontage of the property.

Based on these property factors, the property is assigned points as reflected in Tables 11 and 12. The points for all properties within a gulf-front benefit zone are totaled. An individual property's assessment is based on the percentage of total points that property generates.

For example, a single-family home within the Western Gulf-front benefit zone on a 0.5 acre lot with 100 feet of frontage, would receive 1 point for the dwelling unit (i.e., the single-family home), 10 points for the 0.5 acres (at the rate of 1 point per 0.05 acres) and 20 points for the 100 feet of gulf frontage (at the rate of 1 point per 5 linear feet).This property would be assigned 31 points. If all the properties within the Western Gulf-front benefit zone generated a total of 1,000 points, this property would be assessed for 3.1% (i.e., 31 points/1,000 points) of the Project costs allocated to the Western Gulf-front benefit zone. Tables 11 and 12 outline the points system for the two gulf-front benefit zones.

Table 11 – Core Area Zone – Points System

Core Area Zone Point Scoring	
Property Factor	One Point per
Dwelling Units	1 Unit
Acreage	0.10 Acres
Front Footage	10 Feet

Table 12 – Western Gulf-front Zone – Points System

Western Gulf-front Zone Point Scoring	
Property Factor	One Point per
Dwelling Units	1 Unit
Acreage	0.05 Acres
Front Footage	5 Feet

MSBU Assessments: The MSBU property assessments presented herein are intended to be sufficient to generate the local share of costs to construct the Navarre Beach Restoration Project. Enactment of the MSBU requires that the Board of County Commissioners officially authorize or establish an MSBU through enactment of an authorizing ordinance pursuant to the provisions of Chapter 125.01, Florida Statutes.

A recreational benefits distribution based on the number of units in a zone and with the Non-Gulf-front zone adjusted, results in the following distribution of total benefits within the proposed MSBU with the corresponding maximum and minimum assessments. Table 12 summarizes (a) the average annual assessments for each property owner (Contributor) within a benefit zone, and (b) the maximum and minimum assessments per Contributor in each benefit zone. Note that: (a) all non-Gulf-front properties would be assessed at $189 per year as identified in Table 13; and (b) final assessments may change if additional funding is obtained and/or actual Project costs vary from estimated costs.

Table 13- Summary of Individual Average Annual Assessments

	MSBU Annual Costs				Annual Contributions		
Benefit Zone	Amount	% of Total	of MSBU	Number of Contributors	Average	Maximum	Minimum
Core Area	$444,945	16.4%	58.3%	939	$474	$38,316	$243
Western Gulf-front	$110,083	4.0%	14.4%	257	$428	$1,008	$86
Non Gulf-front	$207,548	7.6%	27.2%	1,100	$189	$189	$189
Total:	$762,576	28.0%	100%	2,296	$332	$38,316	$86

Attached are tables (dated February 1, 2016) summarizing the individual property assessments including:

- Core Area Assessments
- Western Gulf-front Assessments.

6.0 References

Armbruster, Lisa – Sustainable Beaches, LLC for Bay County (November 5, 2013). Interview by P. Gattis – Coastal Tech [Telephone Conference Report]. Vero Beach, FL.

Chabaut, Lindey – City of Destin (November 5, 2013). Interview by P. Gattis – Coastal Tech [Telephone Conference Report]. Vero Beach, FL.

Coastal Tech, 2012a. "Navarre Beach Berm and Dune Restoration Project: Monitoring Report – 2012 – Beach Fill Performance." Vero Beach, FL.

Coastal Tech, 2012b. "St. Lucie County South County Beach & Dune Restoration Project Local Funding Plan." Vero Beach, FL.

Congressional Research Service, 2013. "Army Corps of Engineers: Water Resource Authorizations, Appropriations, and Activities." Washington, DC.

Currington, Mark – Franklin County (November 5, 2013). Interview by P. Gattis – Coastal Tech [Telephone Conference Report]. Vero Beach, FL.

Day, Tim – Escambia County (November 5, 2013). Interview by P. Gattis – Coastal Tech [Telephone Conference Report]. Vero Beach, FL.

Emergency Management and Assistance, 2002. 44 Code of Federal Regulations §206.226

Florida Attorney General, 2012. "Advisory Legal Opinion; Number: AGO 2012-19; Subject: Infrastructure surtax, beach erosion projects/studies." Tallahassee, FL. (http://myfloridalegal.com/__85256236006EB5E1.nsf/0/3CDE67BCBEAE476685257A0E006B2D58?Open&Highlight=0,212,055)

Florida Department of Revenue, 2013. "Discretionary Sales Surtax Information." Tallahassee, FL. (http://dor.myflorida.com/dor/forms/2014/dr15dss.pdf)

National Environmental Policy Act, 1969. 40 Code of Federal Regulations §4331 et seq.

Navarre Beach Leaseholders & Residents Association (NBLRA), 2013. "November Presidents Report." Navarre Beach, FL.

Navarre Beach Leaseholders & Residents Association (NBLRA) email, from Ms. Linda Coley, President of NBLRA, December 4, 2013, Navarre Beach, FL.

Office of Economic and Demographic Research/Florida Department of Revenue, 2013. "Local Discretionary Sales Surtax: Revenue Estimates for the Local Fiscal Year

Ending September 30, 2014." Tallahassee, FL (http://www.edr.state.fl.us/Content/local-government/data/county-municipal/LDSS13-14.pdf)

Pickel, Brad – Seahaven Consulting for Walton County (November 15, 2013). Interview by J. Sellers – Coastal Tech [Telephone Conference Report]. Vero Beach, FL.

Santa Rosa County, 2013. "FY 2013-2014 Santa Rosa County Recommended Budget." Milton, FL.

Sarasota County Tax Collector, 2013. "Tourist Development Tax." Sarasota County, FL. (http://www.sarasotataxcollector.com/TOURIST_PAGES/TDT_home.htm#HowTaxUsed)

Water Resources Council, 1983. "Principles and Guidelines for Water and Related Resources Implementation Studies." Washington, DC.

Budget Item 10

There is no back-up documentation for this item.