STAFF ANALYSIS

Conditional Use 2015-CU-024 & Variance 2015-V-064

General Information:

Project/Applicant Navarre Family Watersports/Greg Britton

Project Location: 8671 Navarre Pkwy., Navarre

Parcel Number: 21-2S-26-0000-00126-0000

Request 1: Conditional Use to allow commercial outdoor amusement activities, specifically a miniature (putt putt) golf course, ~~zip line~~ and inflatable aqua island water park within HCD/HON (Highway Commercial Development/Heart of Navarre) zoning district

Request 2: Conditional Use to allow recreational activities, specifically a boat and jet ski excursion rental facility with dock within an HCD/HON (Highway Commercial Development/Heart of Navarre) zoning district.

Request 3: Variance request to reduce the side setbacks from 50 feet to 0 feet to accommodate commercial outdoor amusement activities.

Request 4: Variance request to reduce the rear setback from 50 feet to 25 feet to accommodate commercial outdoor amusement activities.

(LDC 6.09.02.V, 6.09.02.EE, 6.09.02.EE.6, & 12.01.02.A)

Zoning District: HCD/HON (Highway Commercial Development/Heart of Navarre)

Current Conditions: The lot is currently used for commercial outdoor amusement activities. An Environmental Resource Permit has been issued by the Florida Department of Environmental Protection to construct and operate a commercial docking facility with fueling facilities. The permit has been attached at the end of the packet. ~~As of 01/6/2016 an application has been made to the FDOT Aviation and Spaceports office. Staff is attempting to obtain a copy of the application~~. FDOT Aviation Office has approved the helicopter excursion

operation with a modest expansion of the safety area which precludes the previously zip line location.

Land Development Code Criteria:

6.09.02 Criteria Regulating Conditional Uses: All approved conditional uses shall be developed and maintained as approved by the Board of County Commissioners as applicable. Failure to do so shall constitute a violation of this ordinance. In addition to the general provisions cited above, a conditional use shall be permitted by the Board of County Commissioners provided the Board finds that the proposed conditional use complies with the following requirements:

V. Recreational Activities:

EE. Commercial Outdoor Amusement Activities (HCD, M-1, M-2, C-1M, and C-2M)

1. Setbacks for any commercial outdoor amusement activity, including uses and structures, shall be at least fifty (50) feet from all property lines. When such commercial amusement activity abuts residential zoning districts, the setback shall be at least two hundred (200) feet from those property lines.

Conditional Use Criteria:

6.09.00 CONDITIONAL USES

6.09.01 General Provisions Regulating Conditional Uses: A conditional use shall be reviewed by the Zoning Board of Adjustment and a recommendation for approval made to the Board of County Commissioners provided the Board finds that the use:

A. Is so designed, located, and proposed to be operated so that the public health, safety, and welfare will be protected;

Is this criterion met? ~~**No**~~ **Uncertain**

Staff Analysis: It is not anticipated that the proposed use will be designed, located and operated so that the public health, safety, and welfare will be protected.

The applicant is requesting to utilize the property as a miniature (putt putt) golf course, ~~zip line~~, inflatable aqua island water park and a boat and jet ski excursion rental facility with a dock. ~~The existing helicopter sightseeing tours do pose safety concerns for those playing miniature (putt putt) golf, and those utilizing the zip line and inflatable aqua island.~~ The proposed boat and jet ski excursion rental facility also is a cause for concern for those

utilizing the ~~zip line and~~ inflatable aqua island. With people swimming that close to boat and jet ski rentals there is the possibility for unfortunate encounters between swimmers and boats and jet skis. <u>Although FDOT Aviation Office has approved a modestly expanded safety area around the helicopter pad, their regulations do not address compatible uses immediately adjacent to the safety area.</u>

~~While this request does not include the previously approved helipad, the Florida Department of Transportation Aviation and Spaceports Office has concerns as it relates to the heliport and the proposed adjacent uses. They require fuel tanks to be within 50 feet of the aircraft and more than 50 feet from any smoking area (wooden boardwalk, bar/food area). They indicate that the zipline will need to be further from the helipad.~~

B. Will not unduly adversely affect other property in the impacted area which it is located;

Is this criterion met? Yes

Staff Analysis: It is not anticipated that the proposed use will unduly or adversely affect other property in the impacted area in which it is located. The subject site has commercial to the north and east, recreation/open space to the west.

C. Is consistent with the Goals, Objectives, and Policies of the Santa Rosa County Comprehensive Plan;

Is this criterion met? Yes

Staff Analysis: According the Santa Rosa County Future Land Use Map (FLUM) the subject area for the proposed Conditional Use is located within a COMM (Commercial) land use category. The request is consistent with the Goals, Objectives and Policies of the Santa Rosa Comprehensive Plan.

D. Satisfies criteria stipulated for similar uses as described in the following section.

V. <u>Recreational Activities:</u>

1. Recreational activities limited to the following: archery range, baseball and/or football fields, bicycle path, boat dock, botanical garden, cabanas, excursion or charter boat dock, handball or racquetball courts, outdoor rifle and pistol range, basketball courts, boat anchorage, boat launching ramp, bridle trails, lawn bowling, cemeteries, concession stands, fishing pier, horseshoe pitching courts, public park, indoor rifle and pistol range, softball field, stadium and bleachers, shuffleboard courts, soccer fields, tennis courts, track and field facilities. However, rifle and pistol ranges shall only be allowed as a conditional use in AG and AG-2 districts.

Recreational activities in HCD, M-1, M-2, C-1M, C-2M, AG and AG-2 may be private enterprise (private ownership for profit) or publicly held (state or county) activities.

The following recreational activities in all residential districts (RR-1, R-1, R-1A, R-1M, R-2, R-2M and R-3) must be public held (state or county) or non-profit activities and limited to: baseball and/or football fields, bicycle path, public boat dock, botanical garden, cabanas, handball or racquetball courts, basketball court, boat launching ramp, lawn bowling, fishing pier, horseshoe pitching court, public park, softball field, shuffleboard courts, soccer fields, tennis courts, track and field facilities.

Is this criterion met? Yes

Staff Analysis: The subject site is located within an HCD/HON (Highway Commercial Development/Heart of Navarre) zoning district and is proposed to be used as a boat and jet ski excursion facility with a dock.

2. Site plan approval is required by the Community Planning, Zoning and Development Division pursuant to Section 4.04.00 et seq. of this ordinance. Additionally, the site development plan for land use improvements shall provide for such an arrangement and location of uses and facilities on the land as to give the maximum possible separation from and protection to, contiguous and nearby residential property. Where the nature of the activities or facilities on the land present any potential hazard or detriment to contiguous residential properties arising from noise, glare, dust, odors, smoke, vibration, flying objects or traffic or parking, protection to such contiguous residential properties shall be provided in the form of open spaces, fences, walls, hedges, plantings, enclosures and/or by other such means as may be appropriate and effective to prevent or minimize such hazards.

   Is this criterion met? Yes

   Staff Analysis: The subject site will submit a site plan which when approved will meet the Land Development Code Criteria.

3. Yards:

   a. No parking area shall be located within twenty-five (25) feet of any residentially zoned property.

      Is this criterion met? Yes

      Staff Analysis: The site plan shows the parking area to be more than twenty-five (25) feet from any residentially zoned property.

   b. No structure, (except benches, tables, sitting areas, fountains, fences or walls) as hereinafter provided, shall be provided, shall be located within twenty-five

(25) feet of any property line.

Is this criterion met? Yes

Staff Analysis: The proposed dock for the boat and jet ski excursion rentals is more than 25 feet from the side property lines.

4. Open space and landscaping is permitted or required in accordance with the requirements set forth in Article Seven.

   Is this criterion met? Yes

   Staff Analysis: The open space and landscaping meets the requirements set forth in Article Seven.

5. Parking shall be required in accordance with the requirements set forth in Article Seven.

   Is this criterion met? Yes

   Staff Analysis: The site plan shows the proposed parking area.

6. Fences and Walls:

   a. Fences and walls are permitted or required in accordance with the requirements set forth in Article Seven.

      Is this criterion met? Yes

      Staff Analysis: There are no fences planned for the subject site.

   b. No fence or wall shall be erected within twenty-five (25) feet of any street line.

      Is this criterion met? Yes

      Staff Analysis: There are no fences planned for the subject site.

   c. No fence of wall shall be situated within twenty-five (25) feet of any residentially zoned property line shall exceed six (6) feet in height.

      Is this criterion met? Yes

      Staff Analysis: There are no planned fences for the subject site.

7. Signage is permitted in accordance with the requirements set forth in Article Eight.

Is this criterion met? **Yes**

Staff Analysis: There is existing signage on site.

8. Facilities for refuse collections and removal of solid wastes shall be provided pursuant to Article Seven.

Is this criterion met? **Yes**

Staff Analysis: The applicant has stated that the refuse will be removed by a solid waste provider.

EE. Commercial Outdoor Amusement Activities (HCD, M-1, M-2, C-1M, and C-2M)

1. Commercial outdoor amusement activities including but not limited to skateboard parks, for-profit carnivals or fairs, miniature golf facilities, and zoos.

Is this criterion met? **Yes**

Staff Analysis: The request is to allow a miniature (putt putt) golf course, ~~zip line~~, and inflatable aqua island water park.

2. The scale, intensity, and operation of the use shall not generate unreasonable noise, traffic, congestion or other potential nuisances or hazards to surrounding residential or commercial properties.

Is this criterion met? **Yes**

Staff Analysis: The scale, intensity and operation of the miniature (putt putt) golf course, ~~zip line~~, and the inflatable aqua island water park should not generate unreasonable noise, traffic, congestion or other potential nuisances or hazards to the surrounding properties.

3. Sites should be located within more highly accessible portions of Commercial districts nearest major thoroughfares or minor collector streets as opposed to internal residential streets.

Is this criterion met? **Yes**

Staff Analysis: The site is located along a major thoroughfare.

4. Site plan submitted with the conditional use application shall demonstrate that the site will be designed to maximize compatibility with adjacent land uses of lesser intensity and provide for a smooth transition where greater or varying intensity in land uses exist. When the site abuts residential districts, an eight (8) foot privacy fence must be provided for screening, and a twenty-five (25) foot vegetative buffer, according to Section 7.02.02, must be maintained between the activity and the property line.

Is this criterion met? **Yes**

Staff Analysis: The uses on either side are commercial with a hotel located to the east and a restaurant/bar located to the west.

5. If the site abuts or is within three hundred (300) feet of a residential zoning District, the following restrictions on lighting and noise shall apply:

   c. The total cutoff light shall be at an angle of less than ninety (90) degrees and shall be located so that the bare light bulb, lamp, or light source is completely shielded from the district view of an observer five (5) feet above the ground where the cutoff angle intersects the ground and so that no light can be viewed for said residential districts.

      Is this criterion met? **Yes**

      Staff Analysis: The site is over 300 feet from a residential zoning district.

   d. Loudspeaker, announcement systems, music and other noises shall be located with respect to the zoning district boundaries that the level of sound, as measured in decibels, at the property line shall not exceed 40 db during the hours of 9 a.m. to 6 p.m. or 35 db during the time period from 6 a.m. to 10 p.m. when any commercial outdoor amusement activity so located shall close.

      Is this criterion met? **Yes**

      Staff Analysis: The site is over 300 feet from a residential zoning district.

6. Setbacks for any commercial outdoor amusement activity, including uses and structures, shall be at least fifty (50) feet from all property lines. When such commercial amusement activity abuts residential zoning districts, the setback shall be at least two hundred (200) feet from those property lines.

   Is this criterion met? **No**

   Staff Analysis: The applicant is requesting a variance to this criteria to allow the side setbacks to be reduced to 0 feet and the rear setback be reduced to 25 feet.

Variance Criteria:

2.04.00 SPECIAL EXCEPTIONS, VARIANCES AND CONDITIONAL USES:
The BOA shall have the following duties and powers:

B. No variances shall be authorized under this provision unless the Board finds that all of the following conditions exist:

1. The special circumstances or conditions applying to the building or land in question are peculiar to such property and do not apply generally to other land or buildings in the vicinity.

   Is this criterion met? No

   Staff Analysis: Staff has determined that there are no special circumstances regarding the land or building in question, and that this parcel does not possess unique qualities with respect to size or exceptional shallowness that are peculiar to such property and not to other lots within the area.

   The applicant is seeking relief from the section of the Ordinance which regulates the setbacks from property lines for commercial outdoor amusement activities.

2. The variance is necessary for the preservation and enjoyment of a substantial property right and not merely to serve as a convenience to the applicant.

   Is this criterion met? No

   Staff Analysis: This Variance request is not necessary for the preservation and enjoyment of a substantial property right and is merely a convenience to the property owner.

3. The authorization of the variance will not impair an adequate supply of light and air to adjacent property or unreasonably increase the congestion in public streets, the danger of fire, imperil the public safety, unreasonably diminish or impair established property values within the surrounding area or in any other respect impair the health, safety, comfort, morals or general welfare of the inhabitants of Santa Rosa County.

   Is this criterion met? Yes and No

   Staff Analysis: It is not anticipated that the authorization of this Variance will impair an adequate supply of light and air to adjacent property, increase congestion to public streets, or impair the public safety.

   It is not anticipated that the authorization of this Variance will unreasonably diminish or impair established property values within the surrounding area.

   The close proximity of the helicopter sightseeing tours with the miniature golf, ~~zip line~~ and inflatable aqua island water park is a cause for concern. ~~as well as the proximity of the zip line and aqua island water park to the jet ski and boat rental facility.~~

4. The variance will not impair the intent of the zoning ordinance or zoning district map.

   Is this criterion met? No

   Staff Analysis: If authorized, a Variance without special circumstances would impair the intent of the zoning ordinance.

5. To permit the reduction of parking or loading requirements whenever the character or use of a building is such as to render unnecessary the full provision of parking or loading facilities as specified herein or whenever the strict enforcement of such provision would impose an unreasonable hardship as contrasted with merely granting an advantage or convenience.

   Is this criterion met? N/A

   Staff Analysis: The proposed request does not apply to the reduction of parking or loading requirements nor does it apply to the access management standards which would affect the safety or operation of the roadway.

If the Conditional Use and Variance is approved, are there any potential building code issues?

It is not anticipated that there will be any potential building code issues.

Issue Date: 02/09/2016

Form 725-040-02
AVIATION
OGC-10/03

State of Florida
Department of Transportation

GAC Property Management
13 Calle Rio
Mary Esther, FL 32569

Site Approval Number
SW2016-FLA-0155-HP

AIRPORT SITE APPROVAL ORDER

In accordance with Chapter 330, Florida Statutes, "Regulation of Aircraft, Pilots, and Airports", and Chapter 14-60, Florida Administrative Code, "Airport Licensing and Registration", your proposed airport site is hereby approved by the Florida Department of Transportation, effective March 25, 2016

Facility Name:	GAC WATERFRONT HELIPORT
Facility Use:	Private
Facility Type:	Heliport
County:	Santa Rosa
Latitude:	30º 24' 02.2"
Longitude:	86º 51' 37.90"

The Department is satisfied that your airport, if completed in accordance with your site proposal, will meet all of the following required conditions: (1) that the site has adequate area allocated for the airport, as proposed; (2) that the proposed airport will conform to the Department's licensing or registration requirements; (3) that the proposed airport will comply with the applicable local government land development regulations and zoning requirements; (4) that all affected airports, local governments, and property owners have been notified and any comments submitted by them have been given adequate consideration; and (5) that safe, air-traffic patterns can be established for the proposed airport with all existing airports and approved airport sites in its vicinity.

This Airport Site Approval Order is granted subject to your compliance with the following conditions that are deemed necessary by the Department to protect the public health, safety, or welfare:

All operations are conducted in VFR weather conditions.
The landing area is limited to private use.
All helicopter ingress/egress route operations are conducted on a primary ingress of 120° clockwise to 250° using the touchdown pad as the center of a compass rose.
Aircraft operations are coordinated with Hurlburt Field (HRT)
The heliport maintains and has the following areas painted as shown in the heliport advisory circular: paint a H located in center of TLOF, paint the outline of the TLOF and FATO.
Insure the area south of the safety area does not have any obstacles penetrating the ingress/egress during helicopter operations.

This Airport Site Approval Order is valid for a period of two (2) years, expiring , March 25, 2018 , unless revoked by the Department and may be extended by the Department for subsequent periods of two (2) years for good cause.

This Airport Site Approval Order for the above stated airport does not preempt or waive any law, ordinance or regulation of any other federal, state, or local government body or agency.

Aaron N. Smith
State Aviation Manager

Florida Department of Transportation, Aviation Office
605 Suwannee Street, Mail Stop 46, Tallahassee, Florida 32399-0450
Aviation Office 850-414-4500; aviation.fdot@dot.state.fl.us; http://www.dot.state.fl.us/aviation

2015-CU-024
Location

0 1,000 2,000 4,000 6,000 8,000 Feet

Legend

PendingZBAugust

Disclaimer:
The GIS maps and data distributed by the Santa Rosa County BOCC departments are derived from a variety of public and private sector sources considered to be dependable, but the accuracy, completeness, and currency thereof are not guaranteed. The Santa Rosa County Commission makes no warranties, expressed or implied, as to the accuracy, completeness, currency, reliability, or suitability for any particular purpose of information or data contained in or generated from the County Geographic Database. Additionally, the Santa Rosa Commission or any agent, servant, or employee thereof assume no liability associated with the use of this data, and assume no responsibility to maintain it in any matter or form.

2015-CU-024
Zoning

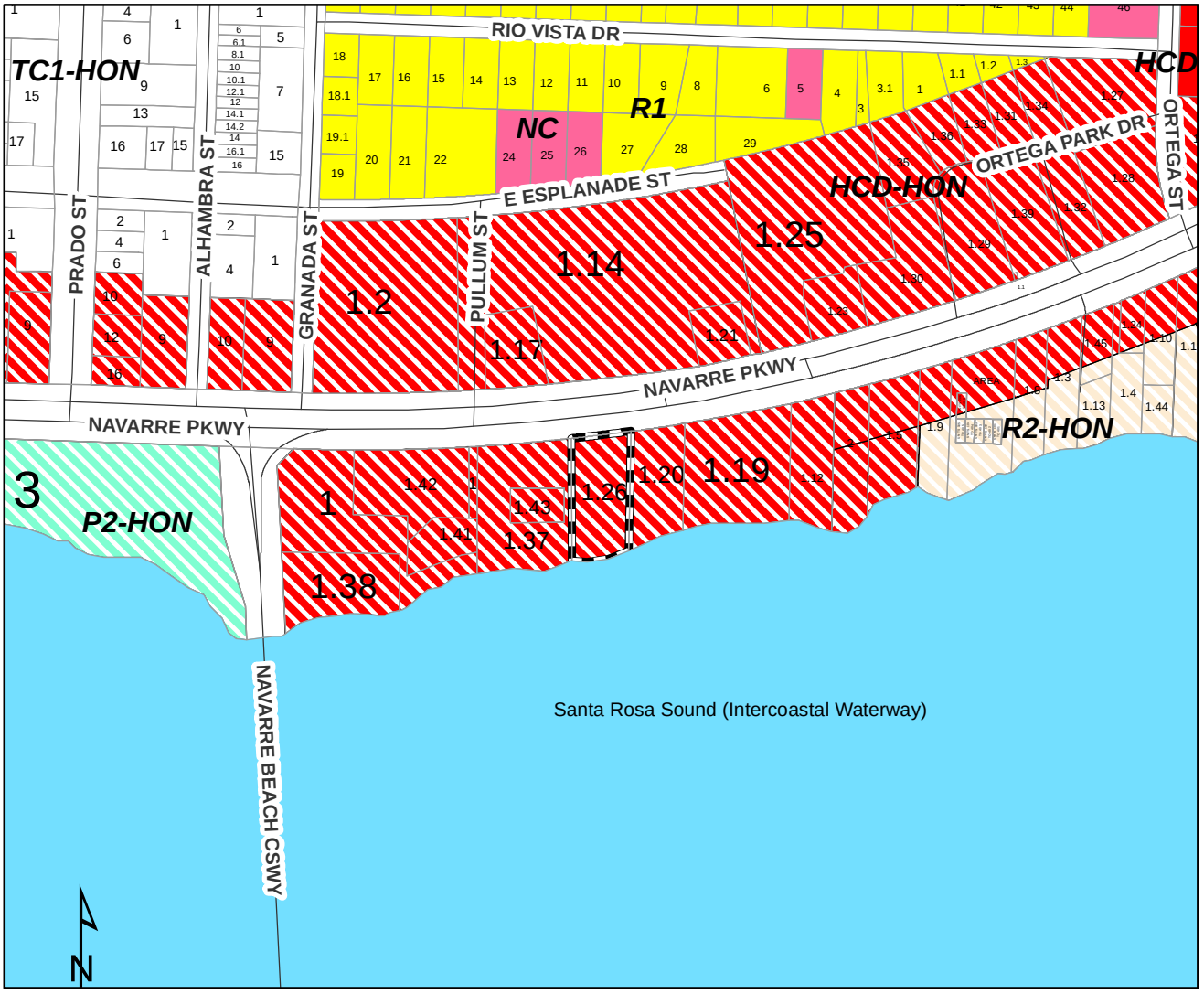

0 400 800 1,600 2,400 3,200 Feet

Legend

PendingZBAugust

- Agriculture/Rural Residential (AG)
- AG within an Accident Potential Zone (AG-APZ)
- Agriculture (AG2)
- AG2 within an Accident Potential Zone (AG2-APZ)
- Marina (C-1M)
- Marina and Yacht Club (C-2M)
- Historical/Commercial (HC-1)
- Highway Commercial Development (HCD)
- HCD within an Accident Potential Zone (HCD-APZ)
- HCD within the Heart of Navarre (HCD-HON)
- HCD with the Navarre Town Center (HCD-NTC)
- Historical/Single Family (HR-1)
- Historical/Multiple Family (HR-2)
- Restricted Industrial (M-1)
- M1 within an Accident Potential Zone (M1-APZ)
- M1 within the Heart of Navarre (M1-HON)
- General Industrial (M-2)
- M2 within an Accident Potential Zone (M2-APZ)
- Planned Industrial Development (PID)
- Neighborhood Commercial (NC)
- NC-APZ
- NC within the Heart of Navarre (NC-HON)
- Passive Park (P-1)
- P1 within the Heart of Navarre (P1-HON)
- Active Park (P-2)
- P2 within an Accident Potential Zone (P2-APZ)
- P2 within the Heart of Navarre (P2-HON)
- Planned Business District (PBD)
- Planned Unit Development (PUD)
- Single Family Residential (R-1)
- R1 within an Accident Potential Zone (R1-APZ)
- R1within the Heart of Navarre (R1-HON)
- Single Family Residential (R-1A)
- Mixed Residential Subdivision (R-1M)
- R1M within an Accident Potential Zone (R1M-APZ)
- R1M within the Heart of Navarre (R1M-HON)
- Medium Density Residential (R-2)
- R2 within an Accident Potential Zone (R2-APZ)
- R2 within the Heart of Navarre (R2-HON)
- Medium Density Mixed Residential (R-2M)
- R2M within an Accident Potential Zone (R2M-APZ)
- R2M-HON
- Medium High Density Residential (R-3)
- Rural Residential Single Family (RR-1)
- RR1 within an Accident Potential Zone (RR1-APZ)
- Navarre Town Center 1 (TC1)
- Navarre Town Center 2 (TC2)
- Navarre Beach - Commercial (NB-C)
- Hotel - Navarre Beach (HNB)
- Navarre Beach - High Density (NB-HD)
- Navarre Beach -Medium Density (NB-MD)
- Navarre Beach - Planned Mixed Use Development (NB-PMUD)
- Navarre Beach - Conservation/Recreation (NB-CON/REC))
- Navarre Beach - Single Family (NB-SF)
- Navarre Beach - Medium High Density (NB-MHD)
- Navarre Beach - Utilities (NB-U)
- State
- State within an Accident Potential Zone (STATE-APZ)
- RAIL
- Right of Ways (ROAD)
- Military (MIL)
- Water
- Municipal Boundaries (CITY)

Disclaimer:
The GIS maps and data distributed by the Santa Rosa County BOCC departments are derived from a variety of public and private sector sources considered to be dependable, but the accuracy, completeness, and currency thereof are not guaranteed. The Santa Rosa County Commission makes no warranties, expressed or implied, as to the accuracy, completeness, currency, reliability, or suitability for any particular purpose of information or data contained in or generated from the County Geographic Database. Additionally, the Santa Rosa Commission or any agent, servant, or employee thereof assume no liability associated with the use of this data, and assume no responsibility to maintain it in any matter or form.

2015-CU-024
Aerial

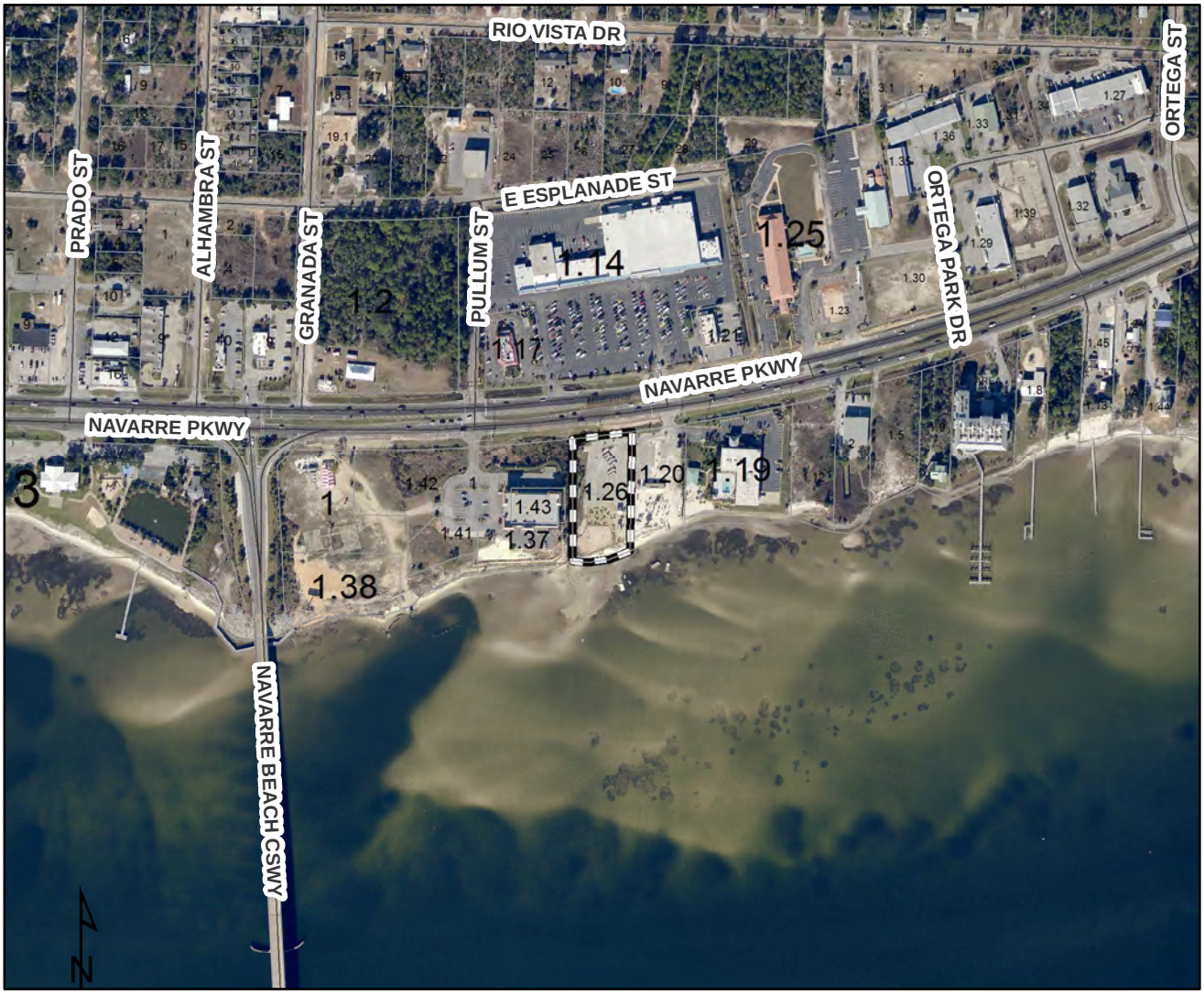

0 400 800 1,600 2,400 3,200 Feet

Legend

PendingZBAugust

Disclaimer:
The GIS maps and data distributed by the Santa Rosa County BOCC departments are derived from a variety of public and private sector sources considered to be dependable, but the accuracy, completeness, and currency thereof are not guaranteed. The Santa Rosa County Commission makes no warranties, expressed or implied, as to the accuracy, completeness, currency, reliability, or suitability for any particular purpose of information or data contained in or generated from the County Geographic Database. Additionally, the Santa Rosa Commission or any agent, servant, or employee thereof assume no liability associated with the use of this data, and assume no responsibility to maintain it in any matter or form.

2015-CU-024
Close Up Aerial

0 100 200 400 600 800 Feet

Legend

PendingZBAugust

Disclaimer:
The GIS maps and data distributed by the Santa Rosa County BOCC departments are derived from a variety of public and private sector sources considered to be dependable, but the accuracy, completeness, and currency thereof are not guaranteed. The Santa Rosa County Commission makes no warranties, expressed or implied, as to the accuracy, completeness, currency, reliability, or suitability for any particular purpose of information or data contained in or generated from the County Geographic Database. Additionally, the Santa Rosa Commission or any agent, servant, or employee thereof assume no liability associated with the use of this data, and assume no responsibility to maintain it in any matter or form.

2015-CU-024
Existing Land Use

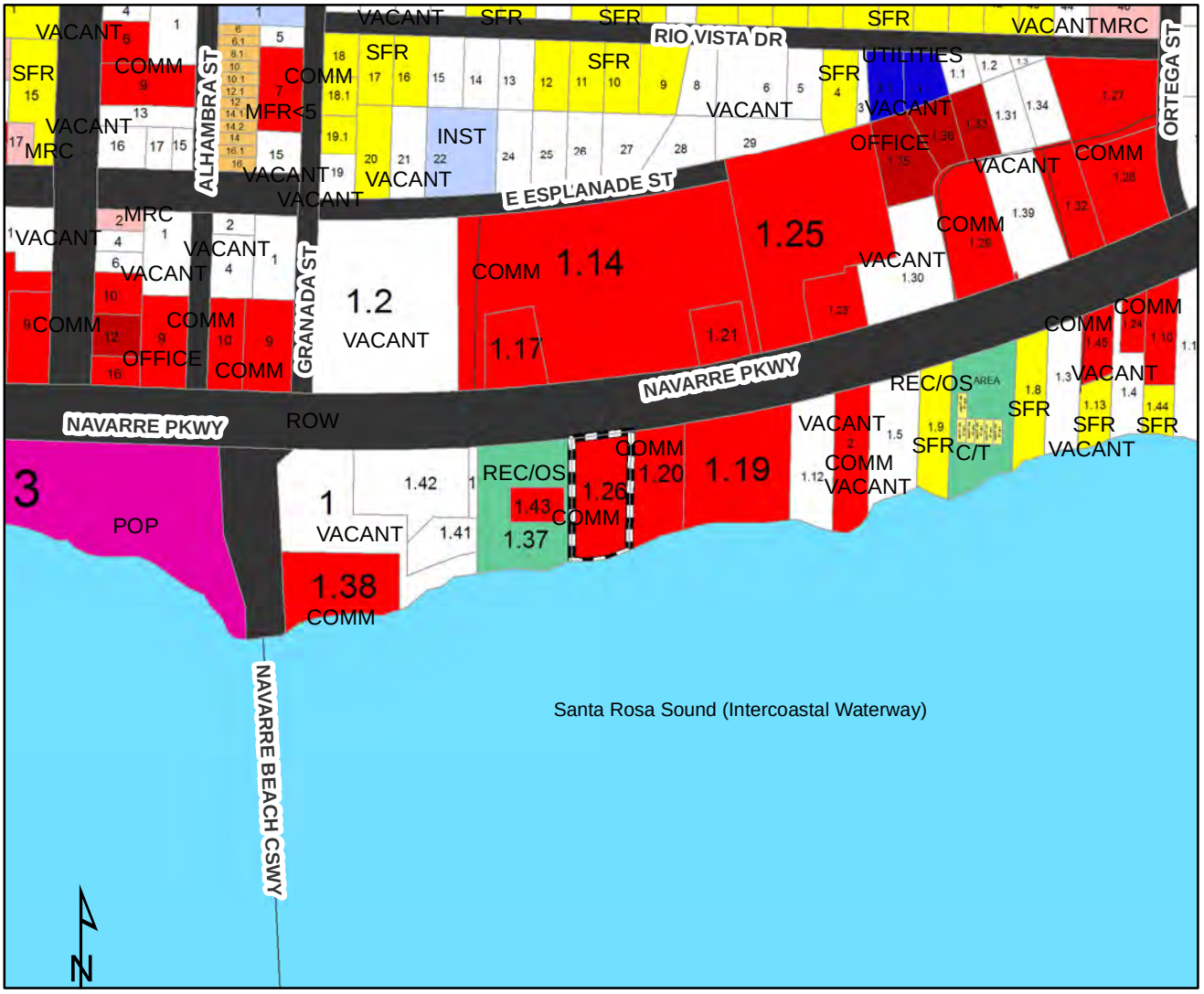

0 400 800 1,600 2,400 3,200 Feet

Legend

PendingZBAugust

Existing Land Use

CATEGORY

- Agriculture
- Agriculture, Homestead
- Condo's/Townhomes
- City
- Commercial
- Industrial
- Institutional
- Multi-Family Residential <5
- Multi-Family Residential >5
- Military
- Mixed Residential/Commercial
- Office
- Public Owned Property
- Rail
- Recreation/Commercial
- Recreation/Open Space
- Right of Way
- Single Family Residential
- Silviculture
- Uncategorized
- Utilities
- Vacant
- Water

Disclaimer:
The GIS maps and data distributed by the Santa Rosa County BOCC departments are derived from a variety of public and private sector sources considered to be dependable, but the accuracy, completeness, and currency thereof are not guaranteed. The Santa Rosa County Commission makes no warranties, expressed or implied, as to the accuracy, completeness, currency, reliability, or suitability for any particular purpose of information or data contained in or generated from the County Geographic Database. Additionally, the Santa Rosa Commission or any agent, servant, or employee thereof assume no liability associated with the use of this data, and assume no responsibility to maintain it in any matter or form.

2015-CU-024
Future Land Use

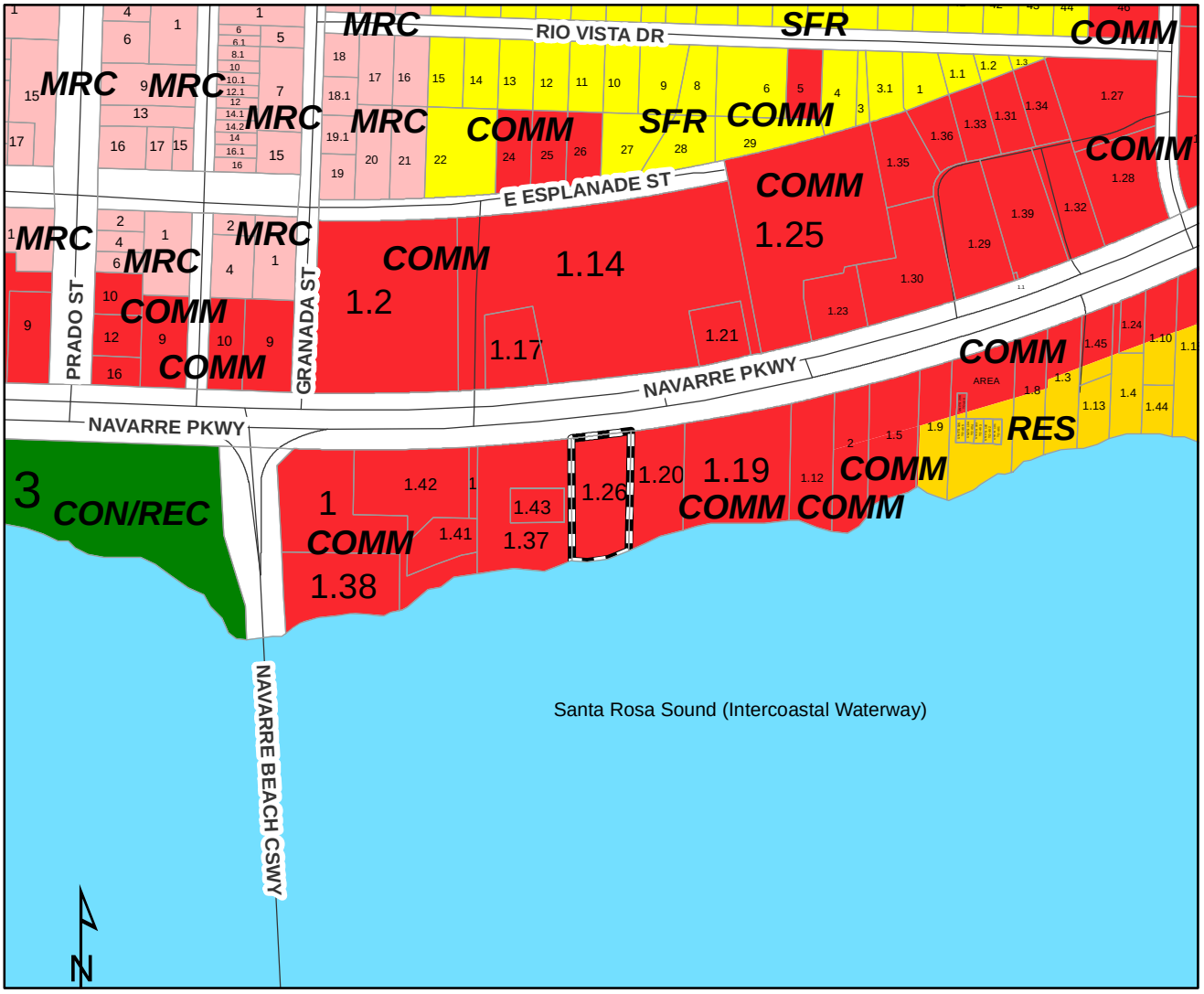

0 400 800 1,600 2,400 3,200 Feet

Legend

- PendingZBAugust
- AGRICULTURE (AG)
- SINGLE FAMILY RESIDENTIAL (SFR)
- MEDIUM DENSITY RESIDENTIAL
- RESIDENTIAL (RES)
- COMMERCIAL (COMM)
- CONSERVATION/RECREATION (CON/REC)
- GP SINGLE FAMILY RESIDENTIAL (GPSFR)
- GP RURAL RESIDENTIAL (GPRR)
- BAGDAD HISTORIC DISTRICT (HIS)
- INDUSTRIAL (INDUS)
- MARINA (MARINA)
- MILITARY (MIL)
- MIXED RESIDENTIAL COMMERCIAL (MRC)
- NAVARRE BEACH COMMERCIAL (NBCOMM)
- NAVARRE BEACH LOW DENSITY RESIDENTIAL (NBLDR)
- NAVARRE BEACH MEDIUM DENSITY RESIDENTIAL (NBMDR)
- NAVARRE BEACH MEDIUM/HIGH DENSITY RESIDENTIAL (NBMHDR)
- NAVARRE BEACH HIGH DENSITY RESIDENTIAL (NBHDR)
- NAVARRE BEACH MIXED RESIDENTIAL/COMMERCIAL (NBMRC)
- NAVARRE BEACH UTILITIES (NBU)
- CITY
- RAIL
- WATER

Disclaimer:
The GIS maps and data distributed by the Santa Rosa County BOCC departments are derived from a variety of public and private sector sources considered to be dependable, but the accuracy, completeness, and currency thereof are not guaranteed. The Santa Rosa County Commission makes no warranties, expressed or implied, as to the accuracy, completeness, currency, reliability, or suitability for any particular purpose of information or data contained in or generated from the County Geographic Database. Additionally, the Santa Rosa Commission or any agent, servant, or employee thereof assume no liability associated with the use of this data, and assume no responsibility to maintain it in any matter or form.

2015-CU-024
Previous Zoning Board Decisions in the Area

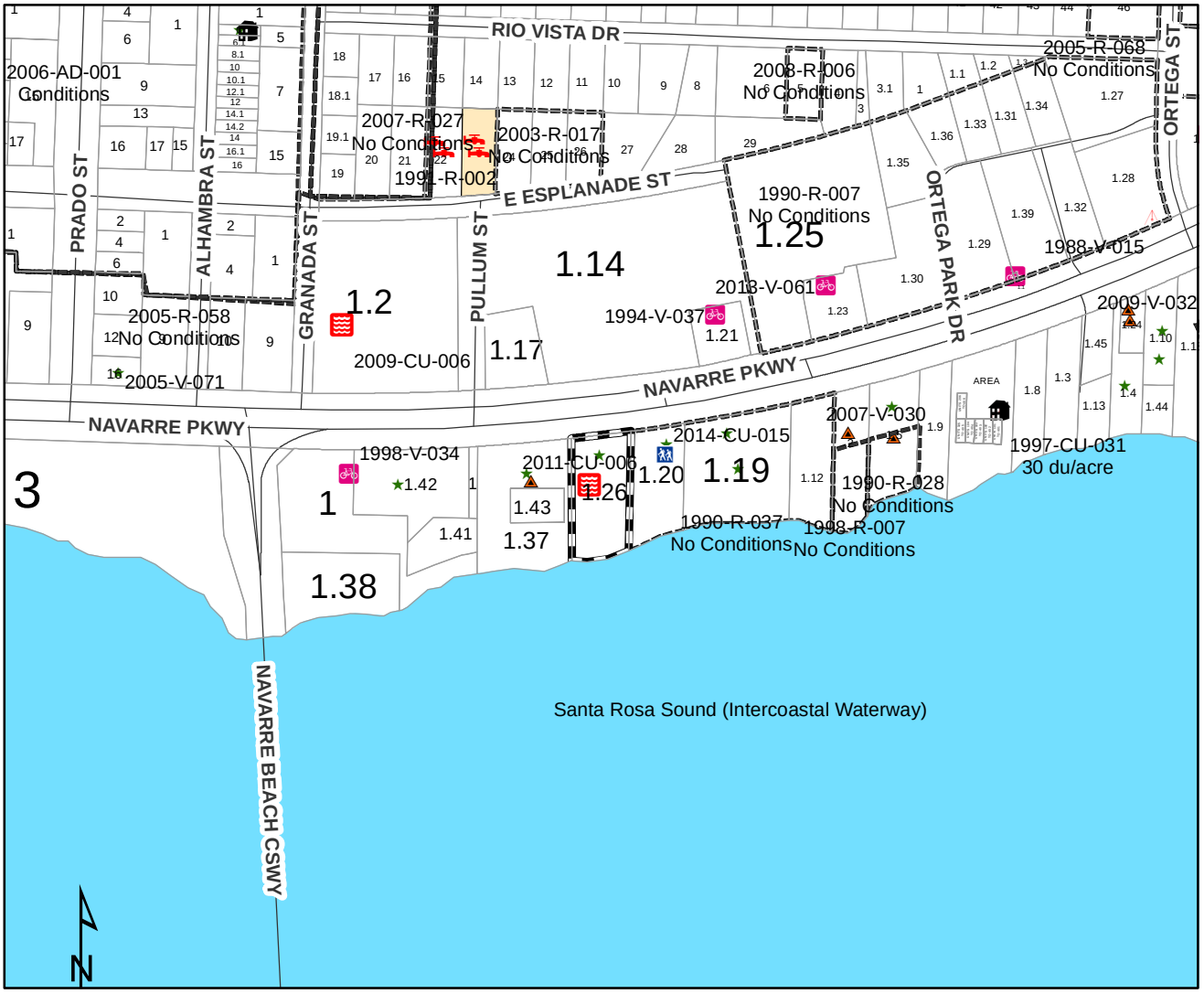

0 400 800 1,600 2,400 3,200 Feet

Legend

PendingZBAugust

Disclaimer:
The GIS maps and data distributed by the Santa Rosa County BOCC departments are derived from a variety of public and private sector sources considered to be dependable, but the accuracy, completeness, and currency thereof are not guaranteed. The Santa Rosa County Commission makes no warranties, expressed or implied, as to the accuracy, completeness, currency, reliability, or suitability for any particular purpose of information or data contained in or generated from the County Geographic Database. Additionally, the Santa Rosa Commission or any agent, servant, or employee thereof assume no liability associated with the use of this data, and assume no responsibility to maintain it in any matter or form.

Santa Rosa County
Development Services

Beckie Cato, AICP
Planning and Zoning Director

Santa Rosa County Public Service Complex
6051 Old Bagdad Highway, Suite 202 Milton, Florida 32583
www.santarosa.fl.gov
Office: (850) 981-7000

Rhonda C. Royals
Building Official

Conditional Use Application

*Application Instructions begin on Page 4

APR 29 '15 PM04:42

** For Official Use Only **			
Application No.	2015 -CU- 024	Date Received:	4-29-15
Review Fee:	$235+ 23.27	Receipt No.:	156
Zoning District:	HCD-HON	Conditional Use Request:	6.09.02.
FLUM Designation:	Comm		

± 1.213 VD # 4

Property Owner

Property Owner Name: GAC PROPERTY MANAGEMENT LLC

Address: 8671 Navarre Pkwy, Navarre, FL 32566

Phone: 850-685-9801 Fax:

Email: gacbritton@cox.net

Applicant

☐ Check here and skip this section if the applicant is the Property Owner. Otherwise, complete this section and provide authorization from the Property Owner giving the Applicant the authority to pursue conditional use approvals.

Company: "Navarre Family Watersports" / Navarre Family Watersports LLC

Contact Name: Greg Britton

Address: 13 Calle Rio, Mary Esther, FL 32569

Phone: 850-685-9801 Fax:

Email: gacbritton@cox.net

Property Information

Parcel ID Number(s): 212S260000001260000

-OR-

Street Address of property for which the Conditional Use is requested:

8671 Navarre Pkwy, Navarre

Parcel Size (acres): 1.34 acres

Conditional Use Request

Please describe the requested conditional use. Attach a site plan showing the proposed development in as much detail as necessary to demonstrate that your request meets the criteria found in Section 6.09.02 (attached).

Conditional Use to allow the following activities developed as "Navarre Family Watersports":

1. Commercial Outdoor Amusement Activity (LDC 6.09.02.EE) , specifically (a) putt-putt golf course, (b) inflatable aqua island water park, (c) zip-line; and 2. Recreational Activities, specifically a boat & jet-ski excursion rental facility with dock

Conditional Use Criteria

I understand that all decisions made by the Zoning Board of Adjustments are subject to appeal and that their decision does not become effective until the appeal time has successfully passed. ☐ Yes ☐ No

I understand that approval by the Zoning Board of Adjustments does not authorize construction and/or land clearing to occur on this site and that additional approvals and Building Permits may be required. ☐ Yes ☐ No

I understand that determinations by the Zoning Board of Adjustments are valid for 36 months. ☐ Yes ☐ No

Please read the attached conditional use information pertaining to your request and describe how your request meets the pertinent criteria. Attach additional sheets if necessary.

See attached

Certification and Authorization

By my signature hereto, I do hereby certify that the information contained in this application and the required supplemental materials is true and correct, and understand that deliberate misrepresentation of such information will be grounds for denial or reversal of this application and/or revocation of any approval based upon this application. I do hereby authorize County staff to enter upon my property at any reasonable time for purposes of site inspection.

GREG BRITTIN
Applicant Name (Type or Print)

Applicant Signature

MANAGING MEMBER
Title (if applicable)

4/29/15
Date

6.09.01 General Provisions Regulating Conditional Uses: A conditional use shall be permitted by the Board of Adjustment (Zoning Review and Appeals Board) provided the Board finds that the use:

A. Is so designed, located, and proposed to be operated so that the public health, safety, and welfare will be protected;

We intend to operate the site and all activities with safety as a first concern. Our business is family-oriented and we want nothing more than for the families within our community to enjoy themselves. We will obtain the necessary permits to ensure the public welfare, health and safety are maintained, as well protecting the environment.

B. Will not unduly adversely affect other property in the impacted area which it is located;

We do not believe that our business endeavor will unduly adversely affect other properties within the area. We offer activities which complement the surrounding businesses. We have a working relationship with Best Western. We offer activities which are kid-friendly and promote family bonding in addition to keeping kids out of trouble.

C. Conforms to all applicable provisions of the district in which the use is to be located;

We will be required to have a Development Order for the project. As such, we will be compliant with all applicable provisions within the district prior to the site approval.

D. Satisfies criteria stipulated for similar uses as described in the following section.

V. Recreational Activities:

1. Recreational activities limited to the following: archery range, baseball and/or football fields, bicycle path, boat dock, botanical garden, cabanas, excursion or charter boat dock, handball or racquetball courts, outdoor rifle and pistol range, basketball courts, boat anchorage, boat launching ramp, bridle trails, lawn bowling, cemeteries, concession stands, fishing pier, horseshoe pitching courts, miniature golf courses, public park, indoor rifle and pistol range, softball field, stadium and bleachers, shuffleboard courts, soccer fields, tennis courts, track and field facilities. However, rifle and pistol ranges shall only be allowed as a conditional use in AG and AG-2 districts.

   Recreational activities in HCD, M-1, M-2, C-1M, C-2M, AG and AG-2 may be private enterprise (private ownership for profit) or publicly held (state or county) activities.

   The following recreational activities in all residential districts (RR-1, R-1, R-1A, R-1M, R-2, R-2M and R-3) must be public held (state or county) or non-profit activities and limited to: baseball and/or football fields, bicycle path, public boat dock, botanical garden, cabanas, handball or racquetball courts, basketball court, boat launching ramp, lawn bowling, fishing pier, horseshoe pitching court, public park, softball field, shuffleboard courts, soccer fields, tennis courts, track and field facilities.

We offer jet-skis and pontoon boats for rent. We will also have a boat dock for their mooring and re-fueling.

2. Site plan approval is required by the Community Planning, Zoning and Development Division pursuant to Section 4.04.00 et seq. of this ordinance. Additionally, the site development plan for land use improvements shall provide for such an arrangement and location of uses and facilities on the land as to give the maximum possible separation from and protection to, contiguous and nearby residential property. Where the nature of the activities or facilities on the land present any potential hazard or detriment to contiguous residential properties arising from noise, glare, dust, odors, smoke, vibration, flying objects or traffic or parking, protection to such contiguous residential properties shall be provided in the form of open spaces, fences, walls, hedges, plantings, enclosures and/or by other such means as may be appropriate and effective to prevent or minimize such hazards.

As stated above, we will have a site plan approved by Santa Rosa County.

3. Yards:

   a. No parking area shall be located within twenty-five (25) feet of any residentially zoned property.

Our parking area is not located within 25 feet of a residentially zoned property.

   b. No structure, (except benches, tables, sitting areas, fountains, fences or walls) as hereinafter provided, shall be located within twenty-five (25) feet of any property line.

We have several structures which are located within 25 feet of the property lines. Additionally, the putt-putt course is located within 50 feet of the Mean High Water Line. Variances are being requested in tandem with the Canditional Use applicatian. All new structures will comply within this criteria.

4. Open space and landscaping is permitted or required in accordance with the requirements set forth in Article Seven.

Open space and landscaping requirements will be in accardance with Article Seven.

5. Parking shall be required in accordance with the requirements set forth in Article Seven.

We will comply with the parking requirements set forth in Article Seven.

6. Fences and Walls:

   a. Fences and walls are permitted or required in accordance with the requirements set forth in Article Seven.

No new fences, with the exception of the barrier around the fuel tank, will be added to the site. The fence around the heli-pad will be enhanced for safety.

   b. No fence or wall shall be erected within twenty-five (25) feet of any street line.

No new fence will be located within 25 feet of the street line.

   c. No fence of wall shall be situated within twenty-five (25) feet of any residentially zoned property line shall exceed six (6) feet in height.

We are not located adjacent to residentially zoned property.

7. Signage is permitted in accordance with the requirements set forth in Article Eight.

Signage will comply with the applicable requirements for the zoning district and Heart of Navarre overlay district.

8. Facilities for refuse collections and removal of solid wastes shall be provided pursuant to Article Seven.

We have a dumpster and will make sure that it is compliance with the Ordinance.

EE. Commercial Outdoor Amusement Activities (HCD, M-1, M-2, C-1M, and C-2M)

1. Commercial outdoor amusement activities including but not limited to skateboard parks, for-profit carnivals or fairs, miniature golf facilities, and zoos.

The activities we operate are a putt-putt golf course, inflatable aqua island water park, and a zip-line.

2. The scale, intensity, and operation of the use shall not generate unreasonable noise, traffic, congestion or other potential nuisances or hazards to surrounding residential or commercial properties.

We do nat believe that our family-based activities will generate an unreasonable amount of noise, congestian, or other nuisances to the adjacent commercial properties. We strive to be good callaborative neighbors and look farward to working with the adjacent businesses.

3. Sites should be located within more highly accessible portions of Commercial districts nearest major thoroughfares or minor collector streets as opposed to internal residential streets.

The subject property is located along a major arterial roadway and has direct access to a traffic signal.

4. Site plan submitted with the conditional use application shall demonstrate that the site will be designed to maximize compatibility with adjacent land uses of lesser intensity and provide for a smooth transition where greater or varying intensity in land uses exist. When the site abuts residential districts, an eight (8) foot privacy fence must be provided for screening, and a twenty-five (25) foot vegetative buffer, according to Section 7.02.02, must be maintained between the activity and the property line.

We will design the site to provide compatibility with patential future development. We are limited on the location far the zip-line due to the existing heli-pad; therefare it will be located on the eastern side of the property. All other activities are waterward of the parking area and are compatible with and complimentary to the adjacent restaurants and hotel. Our property is not located adjacent to a residential zoning district.

5. If the site abuts or is within three hundred (300) feet of a residential zoning district, the following restrictions on lighting and noise shall apply:

a. The total cutoff light shall be at an angle of less than ninety (90) degrees and shall be located so that the bare light bulb, lamp, or light source is completely shielded from the district view of an observer five (5) feet above the ground where the cutoff angle intersects the ground and so that no light can be viewed for said residential districts.

Although we will not operate at night, any new lights will comply with the Ordinance with respect to lighting. We are not located adjacent to a residential district.

b. Loudspeaker, announcement systems, music and other noises shall be located with respect to the zoning district boundaries that the level of sound, as measured in decibels, at the property line shall not exceed 40 db during the hours of 9 a.m. to 6 p.m. or 35 db during the time period from 6 a.m. to 10 p.m. when any commercial outdoor amusement activity so located shall close.

The music system that we operate falls within these parameters. It is a residential-type system.

5. Setbacks for any commercial outdoor amusement activity, including uses and structures, shall be at least fifty (50) feet from all property lines. When such commercial amusement activity abuts residential zoning districts, the setback shall be at least two hundred (200) feet from those property lines.

We are seeking a Variance to this criteria in tandem with this application. Several of our activities are located within 50 feet of the property lines.

Santa Rosa County
Development Services

Beckie Cato, AICP
Planning and Zoning Director

Santa Rosa County Public Service Complex
6051 Old Bagdad Highway, Suite 202 Milton, Florida 32583
www.santarosa.fl.gov
Office: (850) 981-7000

Rhonda C. Royals
Building Official

Variance Application

* Application Instructions begin on Page 5

** For Official Use Only **			
Application No.	_____-V -_____	Date Received:	_____
Review Fee:	_____	Receipt No.:	_____
Zoning District:	_____	FLUM Designation:	_____

Property Owner

Property Owner Name: 1. GAC PROPERTY MANAGEMENT LLC

Address: 13 CALLE RIO, MARY ESTHER, FL, 32569

Phone: 850) 685-9801 Fax: _____

Email: gacbritton@cox.net

Applicant

☐ Check here and skip this section if the applicant is the Property Owner. Otherwise, complete this section and provide authorization from the Property Owner giving the Applicant the authority to pursue variance approvals.

Company: 1. GAC PROPERTY MANAGEMENT LLC

Contact Name: Greg Britton

Address: 13 CALLE RIO, MARY ESTHER, FL, 32569

Phone: 850) 685-9801 Fax: _____

Email: gacbritton@cox.net

Property Information

Parcel ID Number(s): 212S260000001260000

-OR-

Street Address of property for which the Variance is requested:

8671 Navarre Pkwy, Navarre, FL

Variance Request

What is the present use of the property? Navarre Family Watersports

Please describe the requested variance, including exact dimensions and purpose of the variance.

1. To reduce the side setbacks from 50 feet to 0.0 feet to accommodate the commercial outdoor amusement activities
2. To reduce the rear setback from 50 feet to 25 feet to accommodate the commercial outdoor amusement activities

Please describe the special circumstances or conditions that apply to the building or land in questions which necessitate the variance request.

Are the special conditions or circumstances described above the result of a proposed or prior action of the applicant? Yes _____ No _____

Pleas explain why the literal enforcement of the provisions of the Land Development Code will result in unnecessary hardship.

Variance Provisions And Criteria

Do you currently have a Code Enforcement Violation which pertains to this Variance request?	☐ Yes	☐ No
I understand that all decisions made by the Zoning Board of Adjustment are subject to appeal and that their decision does not become effective until the appeal time has successfully passed.	☐ Yes	☐ No
I understand that approval by the Zoning Board of Adjustments does not authorize construction and/or land clearing to occur on this site and that additional approvals and Building Permits may be required.	☐ Yes	☐ No
I understand that determinations by the Zoning Board of Adjustment are valid for 36 months.	☐ Yes	☐ No

Certification and Authorization

By my signature hereto, I do hereby certify that the information contained in this application and the required supplemental materials is true and correct, and understand that deliberate misrepresentation of such information will be grounds for denial or reversal of this application and/or revocation of any approval based upon this application. I do hereby authorize County staff to enter upon my property at any reasonable time for purposes of site inspection.

Applicant Name (Type or Print) _____ Applicant Signature _____

Title (if applicable) _____ Date _____

See next page for proposed location of the zip line and miniature golf course

APPLICANT: BRITTON

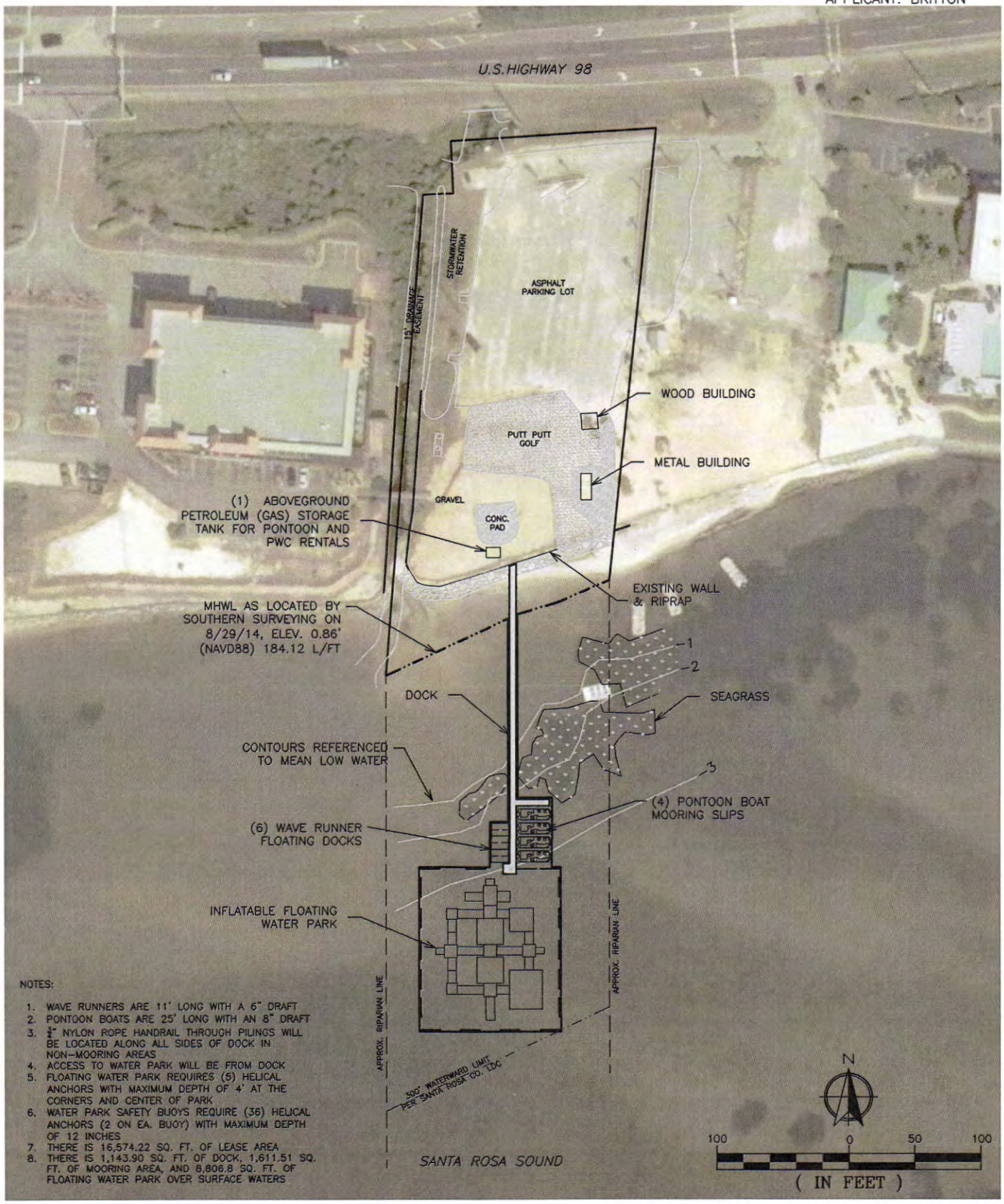

NOTES:

1. WAVE RUNNERS ARE 11' LONG WITH A 6" DRAFT
2. PONTOON BOATS ARE 25' LONG WITH AN 8" DRAFT
3. ¾" NYLON ROPE HANDRAIL THROUGH PILINGS WILL BE LOCATED ALONG ALL SIDES OF DOCK IN NON-MOORING AREAS
4. ACCESS TO WATER PARK WILL BE FROM DOCK
5. FLOATING WATER PARK REQUIRES (5) HELICAL ANCHORS WITH MAXIMUM DEPTH OF 4' AT THE CORNERS AND CENTER OF PARK
6. WATER PARK SAFETY BUOYS REQUIRE (36) HELICAL ANCHORS (2 ON EA. BUOY) WITH MAXIMUM DEPTH OF 12 INCHES
7. THERE IS 16,574.22 SQ. FT. OF LEASE AREA
8. THERE IS 1,143.90 SQ. FT. OF DOCK, 1,611.51 SQ. FT. OF MOORING AREA, AND 8,806.8 SQ. FT. OF FLOATING WATER PARK OVER SURFACE WATERS

PERMITTING PURPOSES ONLY. NOT RELEASED FOR CONSTRUCTION

WETLAND SCIENCES INCORPORATED

ENVIRONMENTAL CONSULTANTS
1829 BAINBRIDGE AVENUE
PENSACOLA, FLORIDA 32507
TEL: 850.453.4700
JTAYLOR@WETLANDSCIENCES.COM

PROJECT NAME: NAVARRE FAMILY WATERSPORTS	
PLAN VIEW DEPICTED ONTO AERIAL	
PROJECT NO.: 2014-281	
BY: JAT	DATE: 2/29/2015
SHEET: 2 OF 9	

See Previous page for location of the proposed boat and jet ski excursion rental facility and dock and the inflatable aqua island location

proposed Miniature golf & zipline location

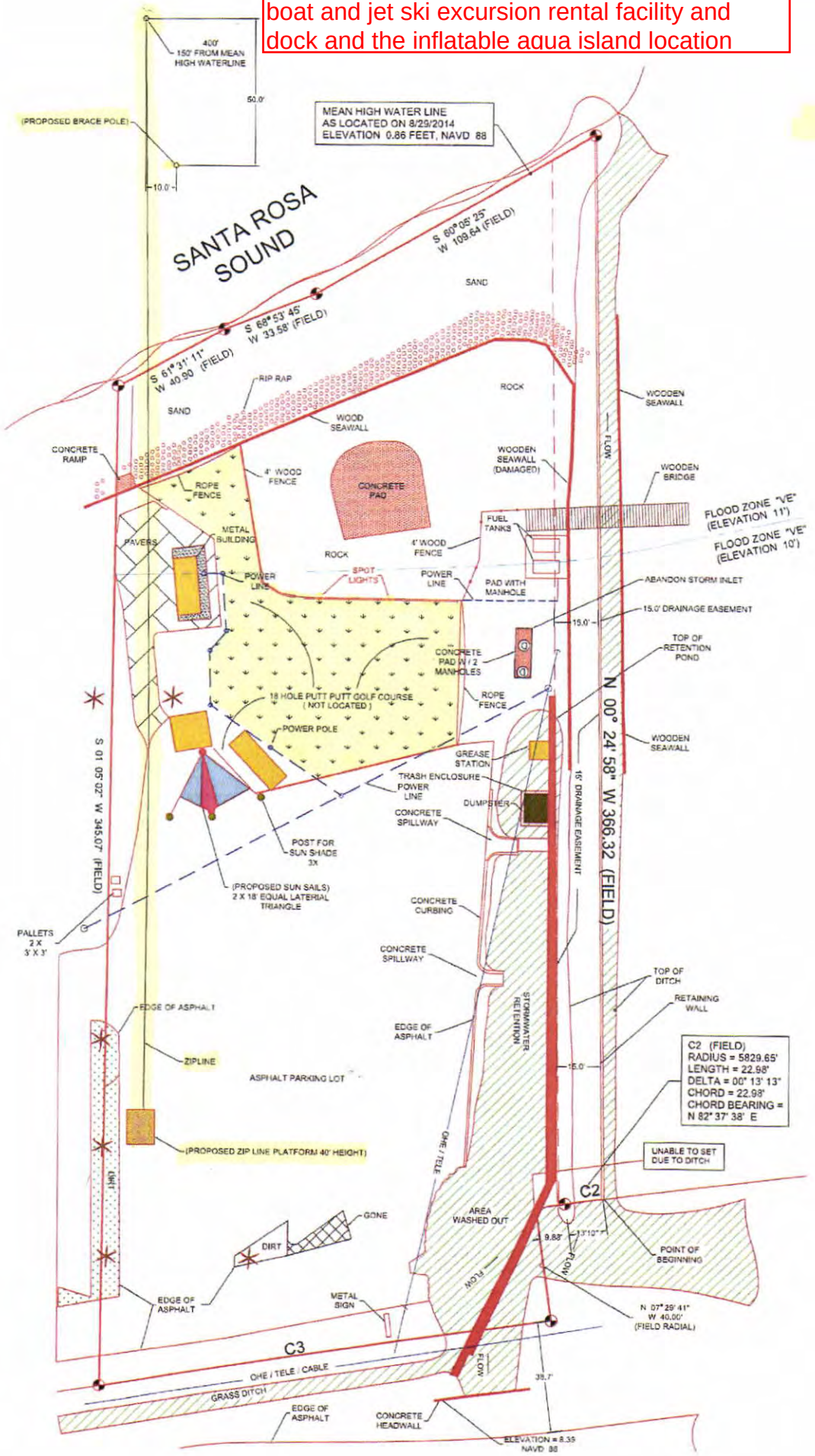

APPLICANT: BRITTON

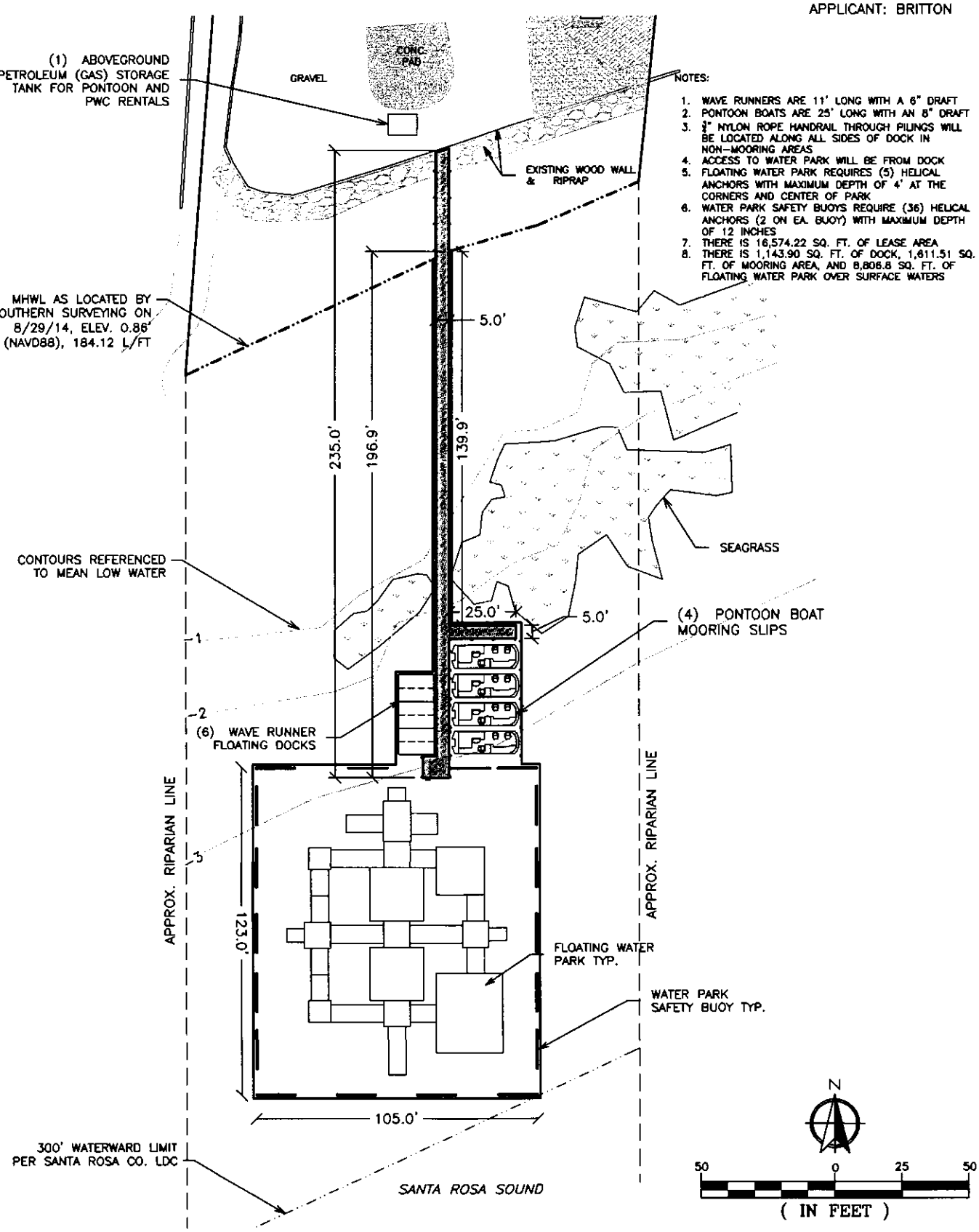

NOTES:

1. WAVE RUNNERS ARE 11' LONG WITH A 6" DRAFT
2. PONTOON BOATS ARE 25' LONG WITH AN 8" DRAFT
3. ¾" NYLON ROPE HANDRAIL THROUGH PILINGS WILL BE LOCATED ALONG ALL SIDES OF DOCK IN NON-MOORING AREAS
4. ACCESS TO WATER PARK WILL BE FROM DOCK
5. FLOATING WATER PARK REQUIRES (5) HELICAL ANCHORS WITH MAXIMUM DEPTH OF 4' AT THE CORNERS AND CENTER OF PARK
6. WATER PARK SAFETY BUOYS REQUIRE (36) HELICAL ANCHORS (2 ON EA. BUOY) WITH MAXIMUM DEPTH OF 12 INCHES
7. THERE IS 16,574.22 SQ. FT. OF LEASE AREA
8. THERE IS 1,143.90 SQ. FT. OF DOCK, 1,611.51 SQ. FT. OF MOORING AREA, AND 8,806.8 SQ. FT. OF FLOATING WATER PARK OVER SURFACE WATERS

PERMITTING PURPOSES ONLY. NOT RELEASED FOR CONSTRUCTION

WETLAND SCIENCES INCORPORATED

ENVIRONMENTAL CONSULTANTS
1829 BAINBRIDGE AVENUE
PENSACOLA, FLORIDA 32507
TEL: 850.453.4700
JTAYLOR@WETLANDSCIENCES.COM

PROJECT NAME: NAVARRE FAMILY WATERSPORTS	
PLAN VIEW	
PROJECT NO.: 2014-281	
BY: JAT	DATE: 2/26/2015
SHEET: 3 OF 9	

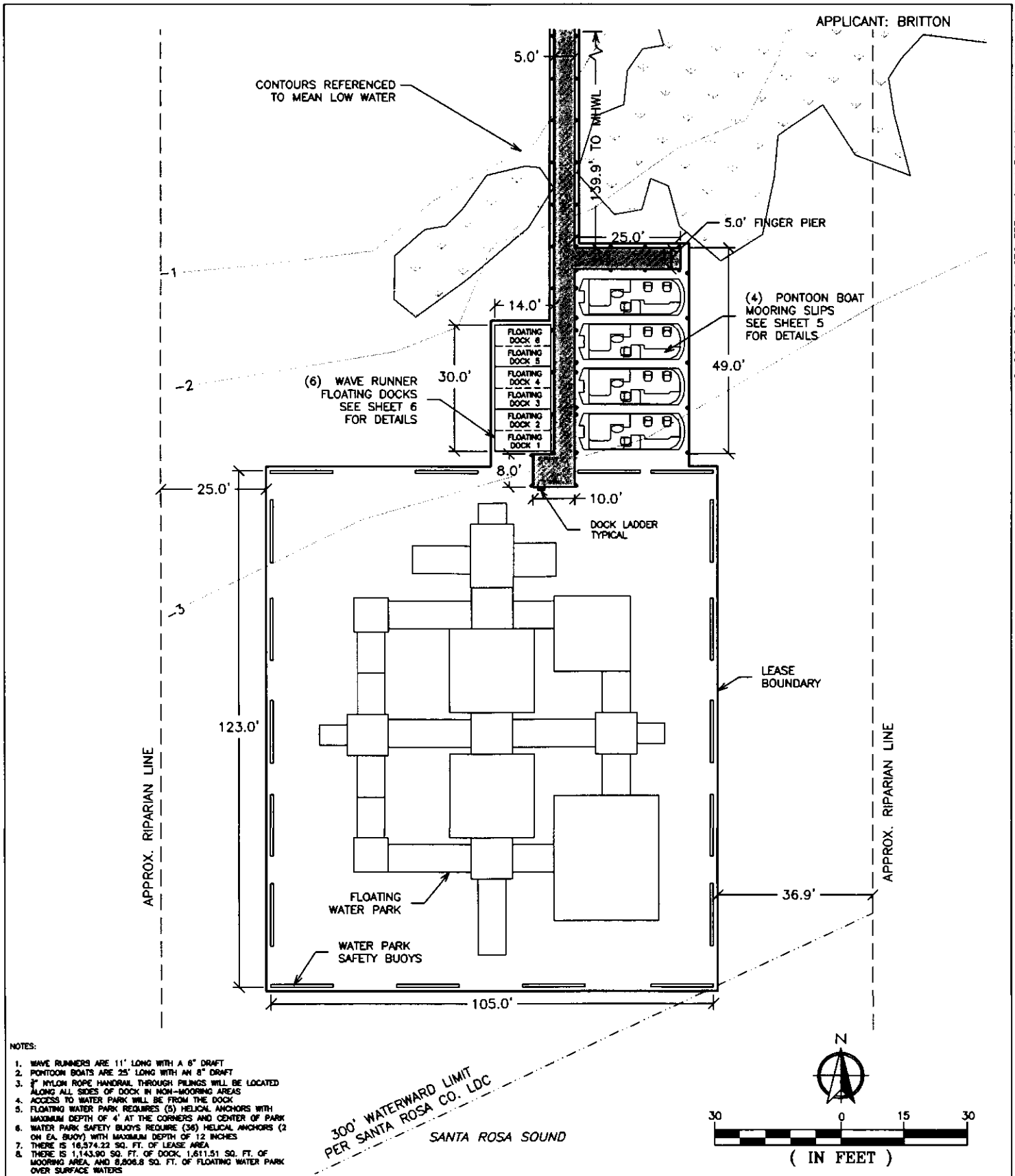

PERMITTING PURPOSES ONLY. NOT RELEASED FOR CONSTRUCTION

NOTES:

1. WAVE RUNNERS ARE 11' LONG WITH A 6" DRAFT
2. PONTOON BOATS ARE 25' LONG WITH AN 8" DRAFT
3. ¾" NYLON ROPE HANDRAIL THROUGH PILINGS WILL BE LOCATED ALONG ALL SIDES OF DOCK IN NON-MOORING AREAS
4. ACCESS TO WATER PARK WILL BE FROM THE DOCK
5. FLOATING WATER PARK REQUIRES (5) HELICAL ANCHORS WITH MAXIMUM DEPTH OF 4' AT THE CORNERS AND CENTER OF PARK
6. WATER PARK SAFETY BUOYS REQUIRE (36) HELICAL ANCHORS (2 ON EA. BUOY) WITH MAXIMUM DEPTH OF 12 INCHES
7. THERE IS 16,574.22 SQ. FT. OF LEASE AREA
8. THERE IS 1,143.90 SQ. FT. OF DOCK, 1,611.51 SQ. FT. OF MOORING AREA, AND 8,806.8 SQ. FT. OF FLOATING WATER PARK OVER SURFACE WATERS

WETLAND SCIENCES INCORPORATED

ENVIRONMENTAL CONSULTANTS
1829 BAINBRIDGE AVENUE
PENSACOLA, FLORIDA 32507
TEL: 850.453.4700
JTAYLOR@WETLANDSCIENCES.COM

PROJECT NAME: NAVARRE FAMILY WATERSPORTS	
CLOSE-UP OF FACILITY	
PROJECT NO.: 2014-281	
BY: JAT	DATE: 2/26/2015
SHEET: 4 OF 9	

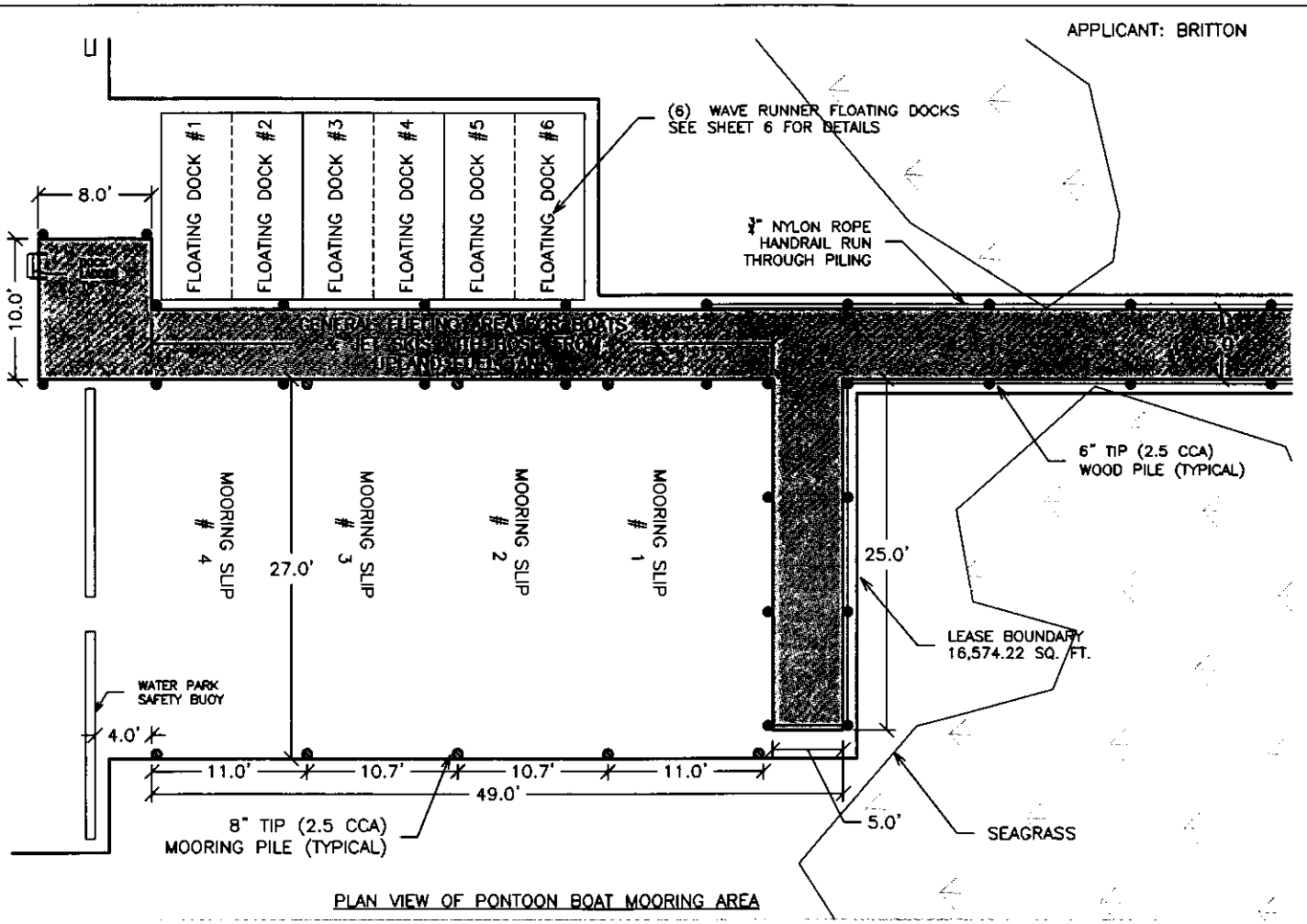

PLAN VIEW OF PONTOON BOAT MOORING AREA

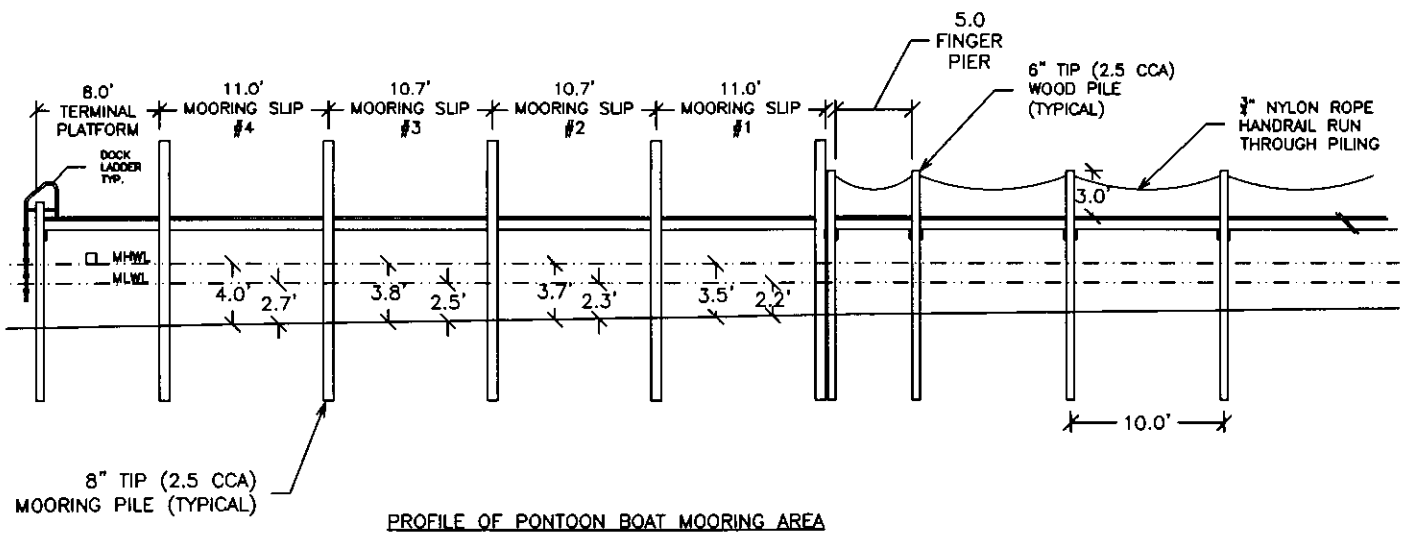

PROFILE OF PONTOON BOAT MOORING AREA

NOTES:

1. PONTOON BOATS ARE 25' LONG WITH AN 8" DRAFT

12 0 6 12
(IN FEET)

PERMITTING PURPOSES ONLY. NOT RELEASED FOR CONSTRUCTION

WETLAND SCIENCES INCORPORATED
ENVIRONMENTAL CONSULTANTS
1829 BAINBRIDGE AVENUE
PENSACOLA, FLORIDA 32507
TEL: 850.453.4700
JTAYLOR@WETLANDSCIENCES.COM

PROJECT NAME: NAVARRE FAMILY WATERSPORTS	
BOAT SLIP PLAN VIEW & PROFILE (TYP.)	
PROJECT NO.: 2014-281	
BY: JAT	DATE: 2/26/2015
SHEET: 5 OF 9	

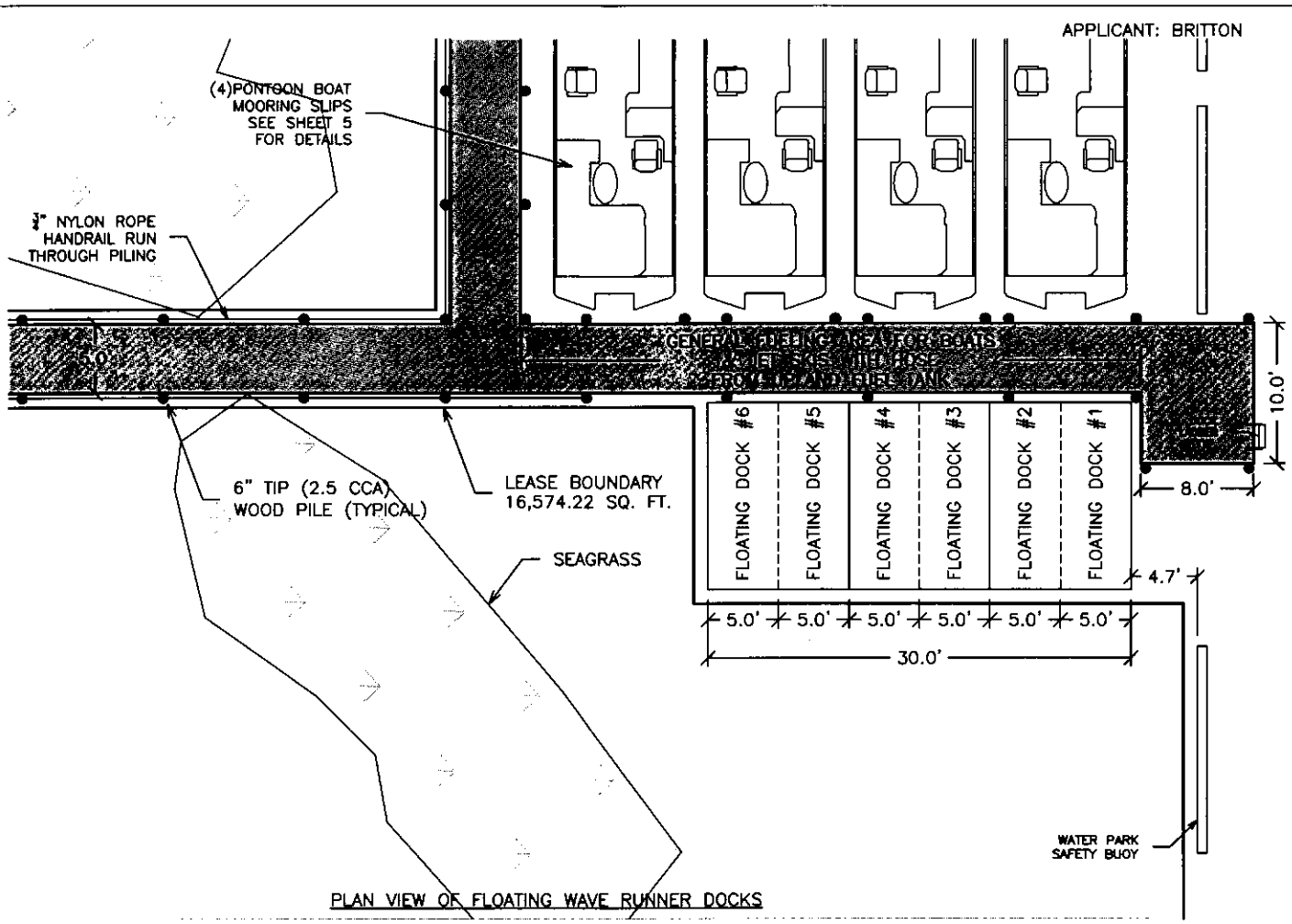

PLAN VIEW OF FLOATING WAVE RUNNER DOCKS

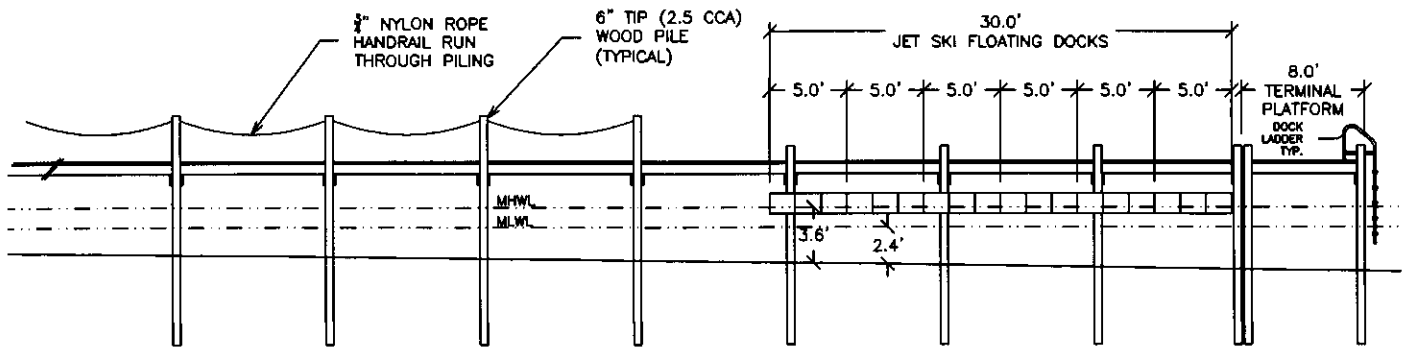

PROFILE OF FLOATING WAVE RUNNER DOCKS

NOTES:

1. WAVE RUNNERS ARE 11' LONG WITH A 6" DRAFT

12 0 6 12

(IN FEET)

PERMITTING PURPOSES ONLY. NOT RELEASED FOR CONSTRUCTION

WETLAND SCIENCES INCORPORATED

ENVIRONMENTAL CONSULTANTS
1829 BAINBRIDGE AVENUE
PENSACOLA, FLORIDA 32507
TEL: 850.453.4700
JTAYLOR@WETLANDSCIENCES.COM

PROJECT NAME: NAVARRE FAMILY WATERSPORTS	
FLOATING DOCK PLAN VIEW & PROFILE (TYP.)	
PROJECT NO.: 2014-281	
BY: JAT	DATE: 2/26/2015
SHEET: 6 OF 9	

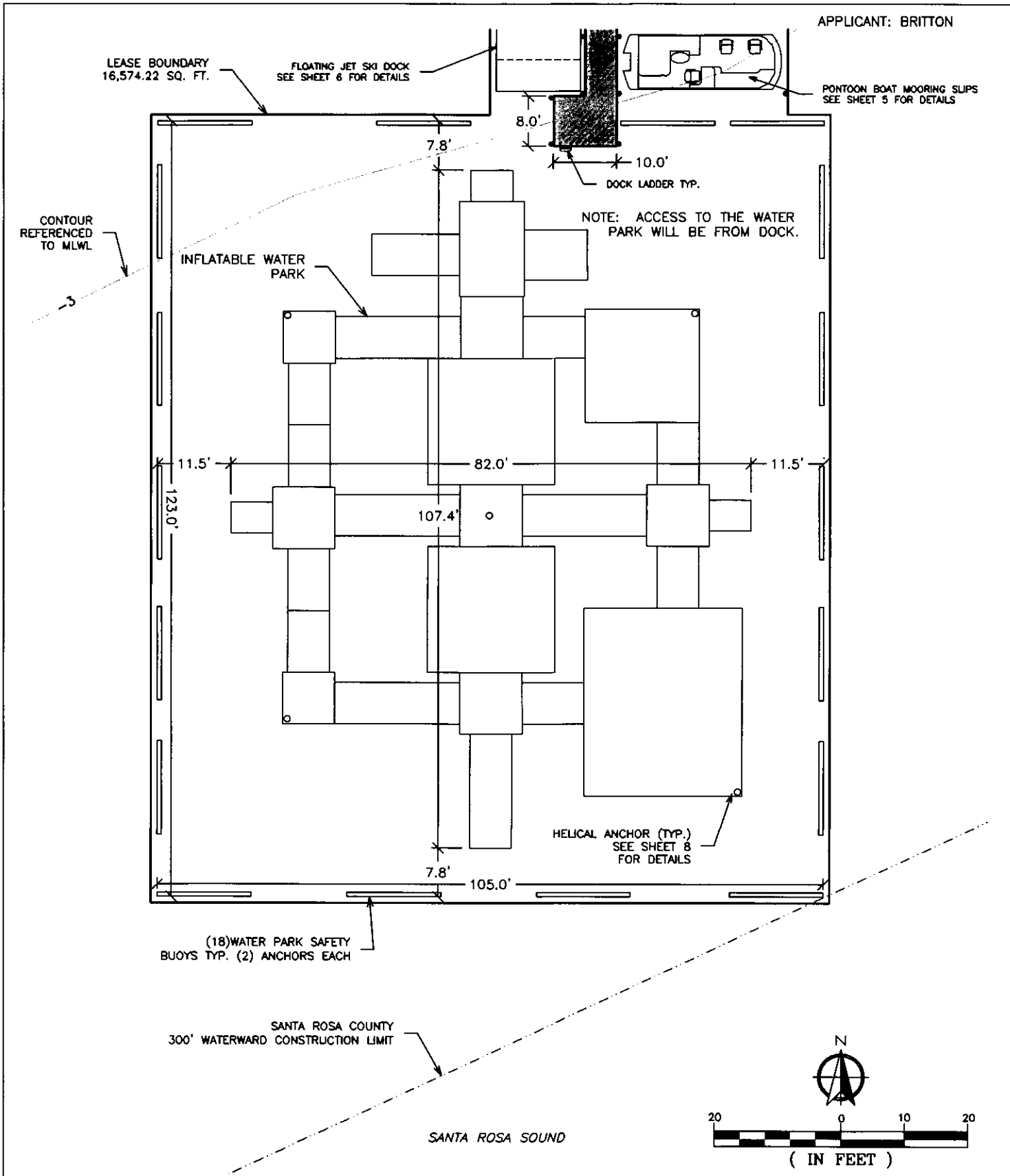

PERMITTING PURPOSES ONLY. NOT RELEASED FOR CONSTRUCTION

WETLAND SCIENCES INCORPORATED

ENVIRONMENTAL CONSULTANTS
1829 BAINBRIDGE AVENUE
PENSACOLA, FLORIDA 32507
TEL: 850.453.4700
JTAYLOR@WETLANDSCIENCES.COM

PROJECT NAME: NAVARRE FAMILY WATERSPORTS	
CLOSE-UP OF WATER PARK	
PROJECT NO.: 2014-281	
BY: JAT	DATE: 2/26/2015
SHEET: 7 OF 9	

APPLICANT: BRITTON

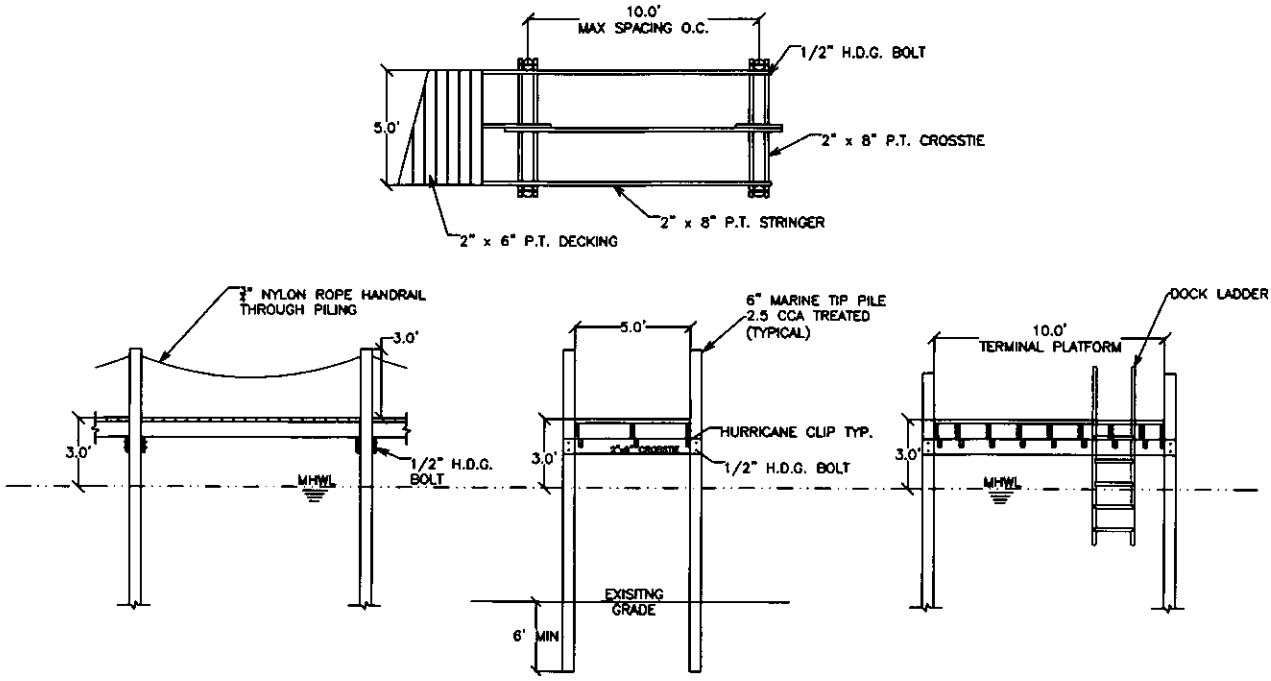

DOCK AND TERMINAL PLATFORM DETAILS (TYPICAL)

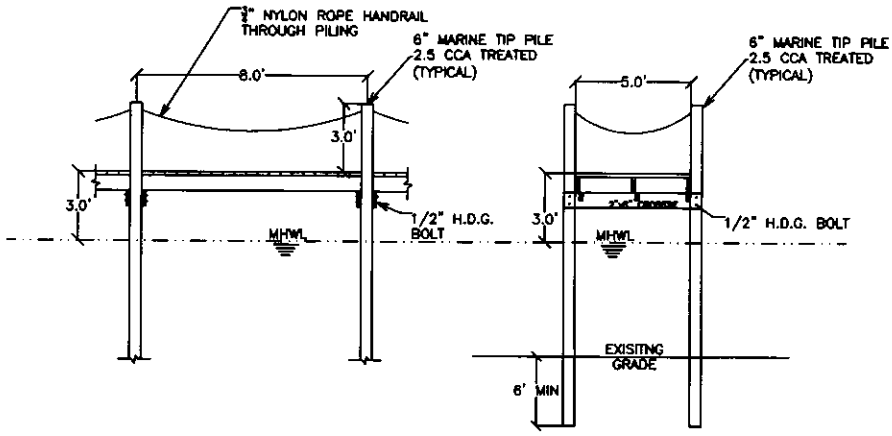

FINGER PIER DETAILS (TYPICAL)

WETLAND SCIENCES INCORPORATED

ENVIRONMENTAL CONSULTANTS
1829 BAINBRIDGE AVENUE
PENSACOLA, FLORIDA 32507
TEL: 850.453.4700
JTAYLOR@WETLANDSCIENCES.COM

PROJECT NAME: NAVARRE FAMILY WATERSPORTS	
DOCK DETAILS (TYPICAL)	
PROJECT NO.: 2014-281	
BY: JAT	DATE: 2/26/2015
SHEET: 8 OF 9	

PERMITTING PURPOSES ONLY. NOT RELEASED FOR CONSTRUCTION

APPLICANT: BRITTON

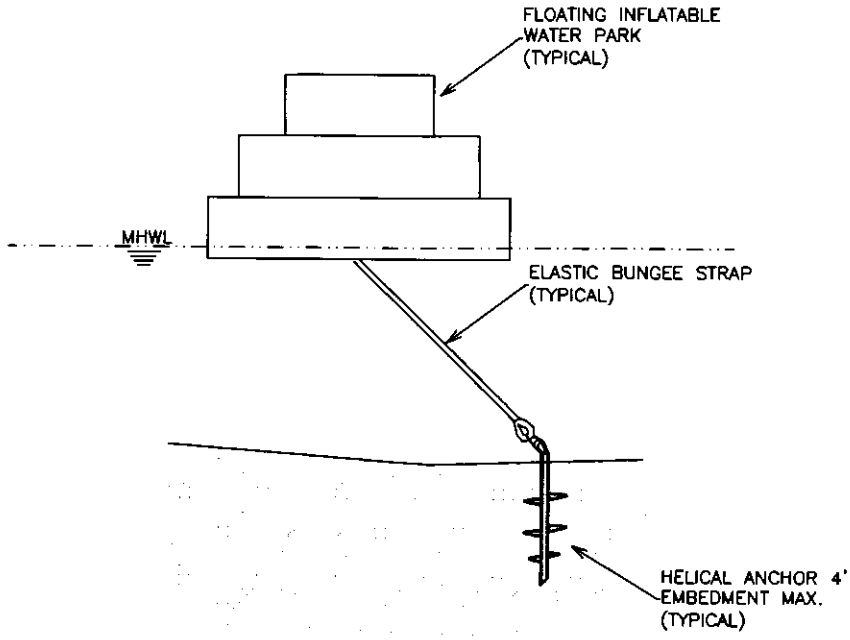

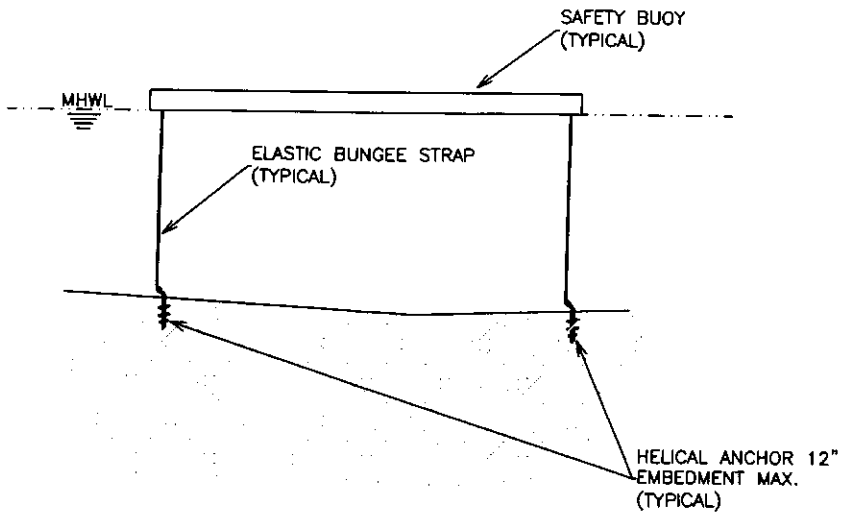

WETLAND SCIENCES INCORPORATED

ENVIRONMENTAL CONSULTANTS
1829 BAINBRIDGE AVENUE
PENSACOLA, FLORIDA 32507
TEL: 850.453.4700
JTAYLOR@WETLANDSCIENCES.COM

PROJECT NAME: NAVARRE FAMILY WATERSPORTS	
WATER PARK AND ANCHOR DETAILS	
PROJECT NO.: 2014-281	
BY: JAT	DATE: 2/26/2015
SHEET: 9 OF 9	

PERMITTING PURPOSES ONLY. NOT RELEASED FOR CONSTRUCTION

Santa Rosa County
Development Services

Beckie Cato, AICP
Planning and Zoning Director

Tony Gomillion
Public Service Director

Rhonda C. Royals
Building Official

August 6, 2015

Greg Britton
Navarre Family Watersports
Via email: gacbritton@cox.net

RE: Pre-Application Meeting on April 29 , 2015
Project Name: **"Navarre Family Water Sports"**
Parcel(s): 212S260000001260000

Dear Greg:

Thank you for attending the above referenced pre-application meeting with the Santa Rosa County Development Services staff. Below you will find a recap of the information discussed at the meeting and the requirements for you to proceed with the project. Portions of this project are currently operational – some with approvals pending. Although it has been a while since we discussed your project, we felt that, given the uniqueness of the project, we should provide an updated action plan with our summary.

I. **Site/Land Use** – Leslie Statler, (850)981-7086, leslies@santarosa.fl.gov

A. The proposed project involves a variety of Commercial Outdoor Amusement Activities, specifically (a) putt-putt golf course, (b) inflatable aqua island water park, (c) zip-line; and Recreational Activities, specifically a boat & jet-ski excursion rental facility with dock.

B. The zoning designation for this property is HCD-HON, Highway Commercial Development within the Heart of Navarre overlay district. The Future Land Use Map designation is COMM, Commercial. These activities require Conditional Use approval per LDC 6.09.02.EE.

C. Conditional Use requests are considered through a public hearing process. This process requires 2 public hearings during which the Zoning Board will make a recommendation followed by a final determination by the Board of County Commissioners. During this process, all property owners within 500 feet will be notified via mail and a sign will be posted on the property.

ACTION: Your application 2015-CU-024 has been placed on the August meeting cycle. You will need to attend both meetings and be prepared to present your request.

1. ***Zoning Board = August 13, 2015 (RECOMMENDATION)***
2. ***Board of County Commissioners = August 27, 2015 (FINAL DETERMINATION)***

Variance 2015-V-064 has also been placed on the Zoning Board agenda. This request is for the following: (a) to reduce the side setbacks from 50 feet to 0 feet to accommodate commercial

outdoor amusement activities; and (b) to reduce the rear setback from 50 feet to 25 feet to accommodate commercial outdoor amusement activities.

D. Based upon the scope of improvements proposed, a site plan package must be submitted for review and approval. Since the impacted area does not exceed 1500 sf in size, the site plan can be processed through our "owner-developer" initiative. The fee for this type of site plan is $350.00. We will not finalize this application until the BOCC makes a decision on the use.

ACTION: Site plan 2015-SP-034 has been started. If the Conditional Use requests are approved, we will proceed with the Site Plan application process.

E. Itinerant vendors require approval from the County to operate on the site.

ACTION: Itinerant Vendor application 2015-SP-022 "Montes Cajun Cooking" has been approved for the site. Additional itinerant vendors have not been approved.

II. <u>Building</u> – Bruce Teston, (850)981-7017, brucet@santarosa.fl.gov

A. Temporary buildings are being utilized on the site for the ticket sales and safety information kiosks. These building have been relocated on the site and do not have approvals for their current locations.

ACTION: The temporary buildings on the site will be allowed; however, they must meet proper tie-down requirements, setbacks, and Flood Plain evaluation. The anchorage or foundation of any approved building must be submitted and designed by a licensed professional to meet the wind speed of 150 mph.

B. The fuel tank has been relocated on the site.

ACTION: This tank will be required to have approvals from the Florida Department of Agriculture. County permit requirements are subject to the State approval process as well as fire/life safety as outlined below in II.C and V. Additionally, a plot plan will be required for a Flood Plain evaluation.

C. The relocation of the fuel tank must be approved through the Holley-Navarre Fire Department Fire/Life Safety Official.

ACTION: Please contact Holley-Navarre Fire Department for specific information for these requirements.

III. <u>Electrical</u> – John Belew, (850) 981-7007, johnb@santatrosa.fl.gov

A. All electrical systems must be reviewed for compliance and a permit issued to a licensed contractor.

ACTION: A licensed electrical contractor will need to make application and provide electrical plans.

B. An itinerant vendor is located on the site and will need electrical service.

ACTION: The itinerant vendor "Montes Cajun Food" has been approved to operate from the site and has been issued an electrical permit 2015-3019 to provide service.

IV. Plumbing – James Rogers, (850) 981-7002, jamesro@santatrosa.fl.gov

A. Bathrooms will be required.

Action: Temporary restroom facility will be allowed. The requirements for these sanitary facilities will need approval of the Health Department.

V. Life Safety – Joe Early, (850) 939-5236, inspector@hnfd.org

ACTION: Please contact Holley-Navarre Fire Department for specific information relative to the operations being conducted on the site.

In closing, our hope is that you found this summary beneficial in bringing this project into compliance and will allow you to make informed decisions about your project. Tambre Lee, Development Review Supervisor, and I will both be your points of contact with this project. Please feel free to contact us with any questions that you may have. Tambre's direct line is 850-981-7042. In addition, you may contact the staff listed above if you have questions specific to their area of expertise.

Respectfully,

Leslie Statler
Planner III
(850)981-7086
leslies@santarosa.fl.gov

LS/lf

Randy Jones

Florida Department of Environmental Protection

160 W. Government Street, Suite 308
Pensacola, Florida 32502-5740

Rick Scott
Governor

Carlos Lopez-Cantera
Lt. Governor

Jonathan P. Steverson
Secretary

Permittee/Authorized Entity:
GAC Property Management, LLC
8671 Navarre Parkway
Navarre, Florida 32566, Santa Rosa County
gacbritton@cox.net

Navarre Family Watersports, LLC – 8761 Navarre Parkway

Authorized Agent:
Jason Taylor
Wetland Sciences, Inc.
3308 Gulf Beach Highway
Pensacola, Florida 32507
jtaylor@wetlandsciences.com

Environmental Resource Permit
State-owned Submerged Lands Authorization – Granted Pending Document Execution

U.S. Army Corps of Engineers Authorization – Separate Corps Authorization Required

Santa Rosa County
Permit No.: 57-0328128-001-EI
Lease File No.: 570350741

Permit Issuance Date: 12/28/2015
Permit Construction Phase Expiration Date: 12/28/2020

Consolidated Environmental Resource Permit and Recommended Intent to Grant Sovereignty Submerged Lands Authorization

Permittee: GAC Property Management, LLC dba Navarre Family Watersports, LLC
Permit No: 57-0328128-001-EI

PROJECT LOCATION

The activities authorized by this permit and sovereignty submerged lands authorization are located at 8671 Navarre Pkwy, Navarre, Florida 32566, Parcel ID: 21-2S-26-0000-00126-0000 in Section 21, Township 02 South, Range 26 West in Santa Rosa County, at lat 30° 24' 1.7447"/long -86° 51' 37.744".

PROJECT DESCRIPTION

The permittee is authorized to construct and operate a commercial docking facility with fueling facilities, consisting of four wetslips and a personal watercraft (PWC) platform accommodating up to six PWC. The authorized structure includes a 172 foot by 5 foot access walkway, one 5 foot by 25 foot finger pier, an 8 foot by 10 foot terminal platform, and a 14 foot by 30 foot floating PWC platform. The docking facility will be used for mooring of recreational rental vessels and provide access to an 82 foot by 107 foot floating waterpark. The dock will have 1,063 square feet of overwater structure; the project, including operation and maintenance of the floating waterpark authorized by Consent Order OGC No. 14-0449-57-SL, will preempt 16,462 square feet. The activities are located within Santa Rosa Sound, a Class II waterbody unclassified for shellfish harvesting. Authorized activities are depicted on the attached exhibits.

AUTHORIZATIONS

Navarre Family Watersports, LLC – 8761 Navarre Parkway

Environmental Resource Permit

The Department has determined that the activity qualifies for an Environmental Resource Permit. Therefore, the Environmental Resource Permit is hereby granted, pursuant to Part IV of Chapter 373, Florida Statutes (F.S.), and Chapter 62-330, Florida Administrative Code (F.A.C.).

Sovereignty Submerged Lands Authorization

The activity is located on sovereignty submerged lands owned by the State of Florida. It therefore also requires authorization from the Board of Trustees of the Internal Improvement Trust Fund (Board of Trustees), pursuant to Article X, Section 11 of the Florida Constitution, and Section 253.77, F.S.

As staff to the Board of Trustees under Sections 253.002, F.S., the Department has determined that the activity qualifies for and requires a lease, as long as the work performed is located within the boundaries as described and is consistent with the terms and conditions herein.

The final documents required to execute the lease will be sent to the permittee/lessee by the Department's Division of State Lands for execution. The Department intends to issue the lease, upon satisfactory execution of those documents, including payment of required fees and compliance with the conditions in the attached permit. **You may not begin construction of the activities described until you receive a copy of the executed lease from the Department.**

Federal Authorization
Your proposed activity as outlined on your application and attached drawings **does not qualify** for Federal authorization pursuant to the State Programmatic General Permit and a **SEPARATE permit** or authorization **may be required** from the Corps. A copy of your permit application has been forwarded to the Corps for their review. The Corps will issue their authorization directly to you or contact you if additional information is needed. If you have not heard from the Corps within 30 days from the date your application was received at the local FDEP Office, contact the Corps at the Pensacola Permits Section at (850) 439-3474, for status and further information. **Failure to obtain Corps authorization prior to construction could subject you to federal enforcement action by that agency.**

Authority for review - an agreement with the USACOE entitled "Coordination Agreement Between the U. S. Army Corps of Engineers (Jacksonville District) and the Florida Department of Environmental Protection, or Duly Authorized Designee, State Programmatic General Permit", Section 10 of the Rivers and Harbor Act of 1899, and Section 404 of the Clean Water Act

Coastal Zone Management
Issuance of this authorization also constitutes a finding of consistency with Florida's Coastal Zone Management Program, as required by Section 307 of the Coastal Zone Management Act.

Water Quality Certification
This permit also constitutes a water quality certification under Section 401 of the Clean Water Act, 33 U.S.C. 1341.

Other Authorizations
You are advised that authorizations or permits for this activity may be required by other federal, state, regional, or local entities including but not limited to local governments or municipalities. This permit does not relieve you from the requirements to obtain all other required permits or authorizations.

The activity described may be conducted only in accordance with the terms, conditions and attachments contained in this document. Issuance and granting of the permit and authorizations herein do not infer, nor guarantee, nor imply that future permits, authorizations, or modifications will be granted by the Department.

PERMIT /SOVEREIGNTY SUBMERGED LANDS CONDITIONS
The activities described must be conducted in accordance with:

- **The Specific Conditions**
- **The General Conditions**
- **The limits, conditions and locations of work shown in the attached drawings**
- **The term limits of this authorization**

You are advised to read and understand these conditions and drawings prior to beginning the authorized activities, and to ensure the work is conducted in conformance with all the terms, conditions, and drawings herein. If you are using a contractor, the contractor also should read and understand these conditions and drawings prior to beginning any activity. Failure to comply with

these conditions, including any mitigation requirements, shall be grounds for the Department to revoke the permit and authorization and to take appropriate enforcement action. Operation of the facility is not authorized except when determined to be in conformance with all applicable rules and this permit and sovereignty submerged lands authorization, as described.

SPECIFIC CONDITIONS - PRIOR TO ANY CONSTRUCTION

1. All contractors involved in this permitted activity shall be provided copies of this permit in its entirety. A copy shall remain onsite at all times during the activities.

2. Prior to the initiation of any work authorized by this permit, floating turbidity screens with weighted skirts that extend to within 1 ft. of the bottom shall be placed around the active construction areas of the site. The screens shall be maintained and shall remain in place for the duration of the project construction to ensure that turbidity levels outside the construction area do not exceed 29 NTU's above background levels. The permittee shall be responsible for ensuring that turbidity control devices are inspected daily and maintained in good working order so that there are no violations of state water quality standards outside of the turbidity screens.

3. The following measures shall be taken immediately by the permittee when turbidity levels within waters of the State surrounding the project site, exceed 29 NTUs above background:

    a. Immediately cease work contributing to the water quality violation.
    b. Stabilize exposed soils contributing to the violation. Modify the work procedures responsible for the violation, install additional turbidity containment devices and repair non-functioning turbidity containment devices.
    c. Notify the Department of Environmental Protection, Submerged Lands & Environmental Resources Program, Compliance and Enforcement Section, Northwest District Office, 160 W Government Street, Pensacola, Florida 32502 – 5740, in writing or by telephone at (850) 595-8300 within 24 hours of the time the violation is first detected.

4. Best management practices for erosion control shall be implemented prior to construction commencement and shall be maintained at all times during construction to prevent siltation and turbid discharges in excess of State water quality standards pursuant to Rule 62-302, F.A.C. Methods shall include, but are not limited to the use of staked hay bales, staked filter cloth, sodding, seeding, staged construction and the installation of turbidity screens around the immediate project site.

SPECIFIC CONDITIONS – CONSTRUCTION ACTIVITIES

5. If the approved permit drawings and/or narrative conflict with the specific conditions, then the specific conditions shall prevail.

6. Storage or stockpiling of tools and materials (i.e., lumber, pilings, debris,) within wetlands, along the shoreline, within the littoral zone, or elsewhere within wetlands or other surface waters is prohibited. This includes floating of pilings in surface waters. All vegetative

material and debris shall be removed to a self-contained upland disposal area with no stockpiling of debris within wetland areas.

7. Construction equipment shall not be repaired or refueled in wetlands or elsewhere within waters of the state.

8. All watercraft associated with the construction of the permitted activities shall only operate within waters of sufficient depth (one-foot clearance from the deepest draft of the vessel/barge to the submerged bottom) so as to preclude bottom scouring or prop dredging.

9. Any damage to wetlands outside of the authorized impact area as a result of construction shall be immediately reported to the Department at (850) 595-8300, and repaired by reestablishing the pre-construction elevations and replanting vegetation of the same species, size, and density as that in the adjacent areas. The restoration shall be completed within 30 days of completion of construction, and the Department shall be notified of its completion within that same 30 day period.

10. This permit does not authorize the construction of any additional structures not illustrated on the permit drawings. Examples of additional structures include but are not limited to walkways, awnings, enclosed sides and covers over slip areas, finger piers, step-down stairs, storage closets and decking.

11. Pilings within areas containing seagrasses shall be installed by vibrating, pounding or hand-auguring them in place. Jetting of pilings within seagrass areas shall be prohibited.

12. No portion of the mooring areas shall be constructed over submerged grass beds.

13. To protect benthic and wetland resources when present, the elevation of the decking shall be a minimum of 5 feet above mean high water and shall have a minimum of 1/2-inch spacing between deck planks. Grated decking can be used as an alternative to 1/2-inch spacing of deck planks.

SPECIFIC CONDITIONS – OPERATION AND MAINTENANCE ACTIVITIES

14. Within 10 days of completion of dock construction, permanent handrails and "No Mooring" signs shall be installed along both sides of the main access pier and along the landward face and eastern face of the finger pier. Handrails shall be constructed to eliminate access to the pier by boaters and shall be maintained for the life of the facility.

15. There shall be a minimum 12-inch clearance between the deepest draft of vessel (with the motor in the down position) and the bottom of the waterbody at mean low water as to preclude bottom scouring or prop dredging.

16. Overboard discharges or through hull discharges of trash, human or animal waste, gray water, or fuel shall not occur at the docking facility.

17. The permittee shall maintain the safety buoys that mark the limits of the waterpark for the life of the facility. These buoys are authorized to float on the surface of the water for the life of the facility.

18. The inflatable structures and safety buoys shall be secured the sound bottom by permanent or semi-permanent anchors.

19. The permittee shall inspect the floats, bungees, cables and anchoring devices on a regular basis and shall be kept in good working condition for the life of the facility and shall be replaced as necessary.

20. The permittee shall ensure that the deployment, inflation, deflation, and removal of the inflatable structures and safety buoys shall not impact the adjacent submerged aquatic vegetation.

21. The permittee shall notify their staff and patrons that the personal watercraft and pontoon vessels are to be moored in the authorized areas, not over submerged aquatic vegetation.

22. Fueling facilities shall be installed at locations shown on the attached permit drawings. The fuel spill contingency plan included as Exhibit 2 shall govern the operation of the fueling facilities and the procedures to be followed in the event of a spill. The fuel spill contingency plan shall include:

    a. The type and storage location of absorbent booms, and other equipment used to contain an accident spill;

    b. The training program for spill response provided to marina personnel; and

    c. The name, address, and telephone number of the company contracted to provide clean-up services.

23. The attached fuel spill contingency plan shall be readily available to marina personnel at all times. The Operations Manager shall be responsible for ensuring all marina personnel are trained and know how to quickly access and use the Oil/Fuel Spill Containment and Contingency Plan.

24. The Department shall be notified when a change in the designation of the clean-up company occurs and shall be provided with the name, address and telephone number of the new company within 14 days. The recommended fuel spill response equipment referenced in Exhibit 2 shall be stored at the site throughout the life of the facility. The fuel spill response equipment shall be maintained in working condition and replaced as necessary for the life of the facility. The Operations Manager shall be trained in the use and deployment of the equipment and shall be responsible for marina staff receiving training in the use and deployment of fuel spill equipment. The Oil/Fuel Spill Containment and Contingency Plan and requirements for its implementation shall be adhered to for the life of the facility.

25. Waterborne craft moored over sovereign submerged lands at the docking facility, on either a temporary or permanent basis, shall not extend beyond the limits of the sovereignty submerged land lease. The permittee shall take all measures necessary to ensure all boats moored over sovereign submerged lands at the docking facility are completely within the limits of the submerged land lease.

SPECIFIC CONDITIONS – ADMINISTRATIVE/EMERGENCIES

26. The construction phase expires at 11:59 p.m. on the date indicated on the cover page of this permit.
27. For emergencies involving a serious threat to the public health, safety, welfare, or environment, the emergency telephone contact number is (800) 320-0519 (State Warning Point). The Department telephone number for reporting nonthreatening problems or system malfunctions is (850) 595-0663, day or night.
28. The mailing address for submittal of forms for the "Construction Commencement Notice", "As-Built Certification ...", "Request for Conversion of Stormwater Management Permit Construction Phase to Operation and Maintenance Phase", or other correspondence is FDEP, SLERP, 160 W. Government Street, Pensacola, Florida, 32502 – 5740.

GENERAL CONDITIONS FOR INDIVIDUAL PERMITS

The following general conditions are binding on all individual permits issued under Chapter 62-330, F.A.C., except where the conditions are not applicable to the authorized activity, or where the conditions must be modified to accommodate project-specific conditions.

1. All activities shall be implemented following the plans, specifications and performance criteria approved by this permit. Any deviations must be authorized in a permit modification in accordance with Rule 62-330.315, F.A.C. Any deviations that are not so authorized may subject the permittee to enforcement action and revocation of the permit under Chapter 373, F.S.

2. A complete copy of this permit shall be kept at the work site of the permitted activity during the construction phase, and shall be available for review at the work site upon request by the Agency staff. The permittee shall require the contractor to review the complete permit prior to beginning construction.

3. Activities shall be conducted in a manner that does not cause or contribute to violations of state water quality standards. Performance-based erosion and sediment control best management practices shall be installed immediately prior to, and be maintained during and after construction as needed, to prevent adverse impacts to the water resources and adjacent lands. Such practices shall be in accordance with the *State of Florida Erosion and Sediment Control Designer and Reviewer Manual* (Florida Department of Environmental Protection and Florida Department of Transportation, June 2007), and the *Florida Stormwater Erosion and Sedimentation Control Inspector's Manual* (Florida Department of Environmental Protection, Nonpoint Source Management Section, Tallahassee, Florida, July 2008), which are both incorporated by reference in subparagraph 62-330.050(9)(b)5., F.A.C., unless a project-specific erosion and sediment control plan is approved or other water quality control measures are required as part of the permit.

4. At least 48 hours prior to beginning the authorized activities, the permittee shall submit to the Agency a fully executed Form 62-330.350(1), "Construction Commencement Notice" (October 1, 2013), which is incorporated by reference in paragraph 62-330.350(1)(d), F.A.C., indicating the expected start and completion dates. A copy of this form may be obtained from the Agency, as described in subsection 62-330.010(5), F.A.C. If available, an Agency website that fulfills this notification requirement may be used in lieu of the form.

5. Unless the permit is transferred under Rule 62-330.340, F.A.C., or transferred to an operating entity under Rule 62-330.310, F.A.C., the permittee is liable to comply with the plans, terms and conditions of the permit for the life of the project or activity.

6. Within 30 days after completing construction of the entire project, or any independent portion of the project, the permittee shall provide the following to the Agency, as applicable:

a. For an individual, private single-family residential dwelling unit, duplex, triplex, or quadruplex – "Construction Completion and Inspection Certification for Activities Associated With a Private Single-Family Dwelling Unit" [Form 62-330.310(3)]; or
b. For all other activities – "As-Built Certification and Request for Conversion to Operational Phase" [Form 62-330.310(1)].
c. If available, an Agency website that fulfills this certification requirement may be used in lieu of the form.

7. If the final operation and maintenance entity is a third party:

a. Prior to sales of any lot or unit served by the activity and within one year of permit issuance, or within 30 days of as- built certification, whichever comes first, the permittee shall submit, as applicable, a copy of the operation and maintenance documents (see sections 12.3 thru 12.3.3 of Volume I) as filed with the Department of State, Division of Corporations and a copy of any easement, plat, or deed restriction needed to operate or maintain the project, as recorded with the Clerk of the Court in the County in which the activity is located.
b. Within 30 days of submittal of the as-built certification, the permittee shall submit "Request for Transfer of Environmental Resource Permit to the Perpetual Operation Entity" [Form 62-330.310(2)] to transfer the permit to the operation and maintenance entity, along with the documentation requested in the form. If available, an Agency website that fulfills this transfer requirement may be used in lieu of the form.

8. The permittee shall notify the Agency in writing of changes required by any other regulatory agency that require changes to the permitted activity, and any required modification of this permit must be obtained prior to implementing the changes.

9. This permit does not:

a. Convey to the permittee any property rights or privileges, or any other rights or privileges other than those specified herein or in Chapter 62-330, F.A.C.;
b. Convey to the permittee or create in the permittee any interest in real property;
c. Relieve the permittee from the need to obtain and comply with any other required federal, state, and local authorization, law, rule, or ordinance; or
d. Authorize any entrance upon or work on property that is not owned, held in easement, or controlled by the permittee.

10. Prior to conducting any activities on state-owned submerged lands or other lands of the state, title to which is vested in the Board of Trustees of the Internal Improvement Trust Fund, the permittee must receive all necessary approvals and authorizations under Chapters 253 and 258, F.S. Written authorization that requires formal execution by the Board of Trustees of the Internal Improvement Trust Fund shall not be considered received until it has been fully executed.

11. The permittee shall hold and save the Agency harmless from any and all damages, claims, or liabilities that may arise by reason of the construction, alteration, operation, maintenance, removal, abandonment or use of any project authorized by the permit.

12. The permittee shall notify the Agency in writing:
   a. Immediately if any previously submitted information is discovered to be inaccurate; and
   b. Within 30 days of any conveyance or division of ownership or control of the property or the system, other than conveyance via a long-term lease, and the new owner shall request transfer of the permit in accordance with Rule 62-330.340, F.A.C. This does not apply to the sale of lots or units in residential or commercial subdivisions or condominiums where the stormwater management system has been completed and converted to the operation phase.

13. Upon reasonable notice to the permittee, Agency staff with proper identification shall have permission to enter, inspect, sample and test the project or activities to ensure conformity with the plans and specifications authorized in the permit.

14. If any prehistoric or historic artifacts, such as pottery or ceramics, stone tools or metal implements, dugout canoes, or any other physical remains that could be associated with Native American cultures, or early colonial or American settlement are encountered at any time within the project site area, work involving subsurface disturbance in the immediate vicinity of such discoveries shall cease. The permittee or other designee shall contact the Florida Department of State, Division of Historical Resources, Compliance and Review Section, at (850) 245-6333 or (800) 847-7278, as well as the appropriate permitting agency office. Such subsurface work shall not resume without verbal or written authorization from the Division of Historical Resources. If unmarked human remains are encountered, all work shall stop immediately and notification shall be provided in accordance with Section 872.05, F.S.

15. Any delineation of the extent of a wetland or other surface water submitted as part of the permit application, including plans or other supporting documentation, shall not be considered binding unless a specific condition of this permit or a formal determination under Rule 62-330.201, F.A.C., provides otherwise.

16. The permittee shall provide routine maintenance of all components of the stormwater management system to remove trapped sediments and debris. Removed materials shall be disposed of in a landfill or other uplands in a manner that does not require a permit under Chapter 62-330, F.A.C., or cause violations of state water quality standards.

17. This permit is issued based on the applicant's submitted information that reasonably demonstrates that adverse water resource-related impacts will not be caused by the completed

permit activity. If any adverse impacts result, the Agency will require the permittee to eliminate the cause, obtain any necessary permit modification, and take any necessary corrective actions to resolve the adverse impacts.

18. A Recorded Notice of Environmental Resource Permit may be recorded in the county public records in accordance with subsection 62-330.090(7), F.A.C. Such notice is not an encumbrance upon the property.

NOTICE OF RIGHTS

This action is final and effective on the date filed with the Clerk of the Department unless a petition for an administrative hearing is timely filed under Sections 120.569 and 120.57, F.S., before the deadline for filing a petition. On the filing of a timely and sufficient petition, this action will not be final and effective until further order of the Department. Because the administrative hearing process is designed to formulate final agency action, the hearing process may result in a modification of the agency action or even denial of the application.

Petition for Administrative Hearing

(a) The name and address of each agency affected and each agency's file or identification number, if known;

(b) The name, address, any email address, any facsimile number, and telephone number of the petitioner; the name, address, and telephone number of the petitioner's representative, if any, which shall be the address for service purposes during the course of the proceeding; and an explanation of how the petitioner's substantial interests are or will be affected by the agency determination;

(c) A statement of when and how the petitioner received notice of the agency decision;

(d) A statement of all disputed issues of material fact. If there are none, the petition must so indicate;

(e) A concise statement of the ultimate facts alleged, including the specific facts that the petitioner contends warrant reversal or modification of the agency's proposed action;

(f) A statement of the specific rules or statutes that the petitioner contends require reversal or modification of the agency's proposed action, including an explanation of how the alleged facts relate to the specific rules or statutes; and

(g) A statement of the relief sought by the petitioner, stating precisely the action that the petitioner wishes the agency to take with respect to the agency's proposed action.

The petition must be filed (received by the Clerk) in the Office of General Counsel of the Department at 3900 Commonwealth Boulevard, Mail Station 35, Tallahassee, Florida 32399-3000 or at Agency_Clerk@dep.state.fl.us. Also, a copy of the petition shall be mailed to the applicant at the address indicated above at the time of filing.

Time Period for Filing a Petition

In accordance with subsection 62-110.106(3), F.A.C., petitions for an administrative hearing by the applicant must be filed within 14 days of receipt of this written notice. Petitions filed by any persons other than the applicant, and other than those entitled to written notice under Section 120.60(3), F.S., must be filed within 14 days of publication of the notice or within 14 days of

receipt of the written notice, whichever occurs first. Under Section 120.60(3), F.S., however, any person who has asked the Department for notice of agency action may file a petition within 14 days of receipt of such notice, regardless of the date of publication. The failure to file a petition within the appropriate time period shall constitute a waiver of that person's right to request an administrative determination (hearing) under Sections 120.569 and 120.57, F.S., or to intervene in this proceeding and participate as a party to it. Any subsequent intervention (in a proceeding initiated by another party) will be only at the discretion of the presiding officer upon the filing of a motion in compliance with Rule 28-106.205, F.A.C.

Extension of Time

Under subsection 62-110.106(4), F.A.C., a person whose substantial interests are affected by the Department's action may also request an extension of time to file a petition for an administrative hearing. The Department may, for good cause shown, grant the request for an extension of time. Requests for extension of time must be filed with the Office of General Counsel of the Department at 3900 Commonwealth Boulevard, Mail Station 35, Tallahassee, Florida 32399-3000, before the applicable deadline for filing a petition for an administrative hearing. A timely request for extension of time shall toll the running of the time period for filing a petition until the request is acted upon.

Mediation

Mediation is not available in this proceeding.

FLAWAC Review

The applicant, or any party within the meaning of Section 373.114(1)(a) or 373.4275, F.S., may also seek appellate review of this order before the Land and Water Adjudicatory Commission under Section 373.114(1) or 373.4275, F.S. Requests for review before the Land and Water Adjudicatory Commission must be filed with the Secretary of the Commission and served on the Department within 20 days from the date when this order is filed with the Clerk of the Department.

Judicial Review

Once this decision becomes final, any party to this action has the right to seek judicial review pursuant to Section 120.68, F.S., by filing a Notice of Appeal pursuant to Rules 9.110 and 9.190, Florida Rules of Appellate Procedure, with the Clerk of the Department in the Office of General Counsel, 3900 Commonwealth Boulevard, M.S. 35, Tallahassee, Florida 32399-3000; and by filing a copy of the Notice of Appeal accompanied by the applicable filing fees with the appropriate District Court of Appeal. The Notice of Appeal must be filed within 30 days from the date this action is filed with the Clerk of the Department.

Executed in Escambia County, Florida.

STATE OF FLORIDA DEPARTMENT
OF ENVIRONMENTAL PROTECTION

Elizabeth Mullins Gill
for Emile D. Hamilton
District Director

Attachments:
Exhibit 1, Project Drawings and Design Specs., 9 pages
Exhibit 2, Oil/Fuel Spill Containment and Contingency Plan, 12 pages

Copies of 62-330 forms can be obtained at:
http://www.dep.state.fl.us/water/wetlands/erp/forms.htm

Copies furnished to:
U.S. Army Corps of Engineers
Santa Rosa County
Department of Community Affairs
Jack Bonney

CERTIFICATE OF SERVICE

The undersigned hereby certifies that this permit and authorization to use sovereignty submerged lands, including all copies, were mailed/emailed before the close of business on December 28, 2015, to the above listed persons.

FILING AND ACKNOWLEDGMENT

FILED, on this date, under 120.52(7), F.S.,
with the designated Department Clerk,
receipt of which is hereby acknowledged.

Mary H. Cole

Clerk — December 28, 2015
Date

APPLICANT: BRITTON

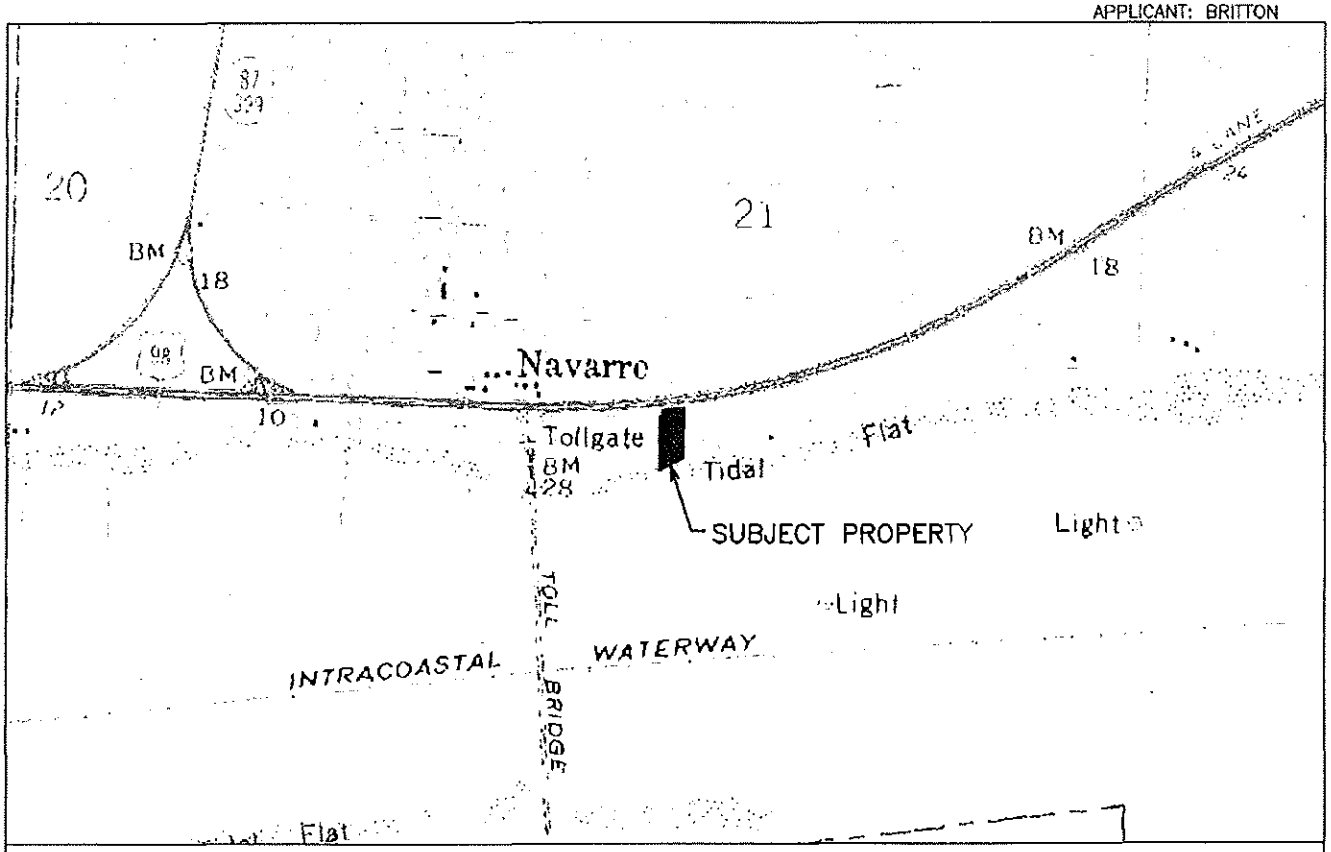

DIRECTIONS TO THE SITE FROM DOWNTOWN PENSACOLA: START OUT GOING EAST ON CHASE STREET/US-98 TOWARDS GULF BREEZE. CONTINUE TO FOLLOW US-98 FOR APPROXIMATELY 23 MILES. SUBJECT PROPERTY IS LOCATED JUST EAST OF THE NAVARRE BEACH CAUSEWAY ON THE RIGHT HAND SIDE OF THE ROAD WITH AN ADDRESS OF 8671 NAVARRE BEACH PARKWAY. PLEASE CALL 850-453-4700 WITH ANY QUESTIONS.

SUBJECT PROPERTY

PARCEL ID#
21-2S-26-0000-00126-0000
PROPERTY OWNER
GAC PROPERTY MANAGEMENT LLC
c/o GREG BRITTON
13 CALLE RIO
MARY ESTHER, FL 32569

PROJECT LOCATION

8671 NAVARRE PKWY
NAVARRE, FL 32566
LAT: 30.400955°
LONG: -86.860493°

INDEX OF SHEETS

SHEET NO.	DESCRIPTION
1	SITE LOCATION MAP
2	PLAN VIEW DEPICTED ONTO AERIAL
3	PLAN VIEW OF PROPOSED DEVELOPMENT
4	CLOSE UP PLAN VIEW
5	BOAT SLIPS PLAN VIEW & PROFILE (TYPICAL)
6	FLOATING DOCK PLAN VIEW & PROFILE (TYPICAL)
7	FLOATING WATER PARK PLAN VIEW
8	DOCK DETAILS (TYPICAL)
9	WATER PARK AND ANCHOR DETAILS (TYPICAL)

DEPARTMENT OF ENVIRONMENTAL PROTECTION
1/9
0328128-001-EI
PERMIT
STATE OF FLORIDA

N

1200 0 600 1200
(IN FEET)

WETLAND SCIENCES INCORPORATED
ENVIRONMENTAL CONSULTANTS
3308 GULF BEACH HIGHWAY
PENSACOLA, FLORIDA 32507
TEL: 850.453.4700
JTAYLOR@WETLANDSCIENCES.COM

PROJECT NAME: NAVARRE FAMILY WATERSPORTS	
SITE LOCATION MAP	
PROJECT NO.: 2014-281	
BY: JAT	DATE: 12/2/2015
SHEET: 1 OF 9	

PERMITTING PURPOSES ONLY. NOT RELEASED FOR CONSTRUCTION

APPLICANT: BRITTON

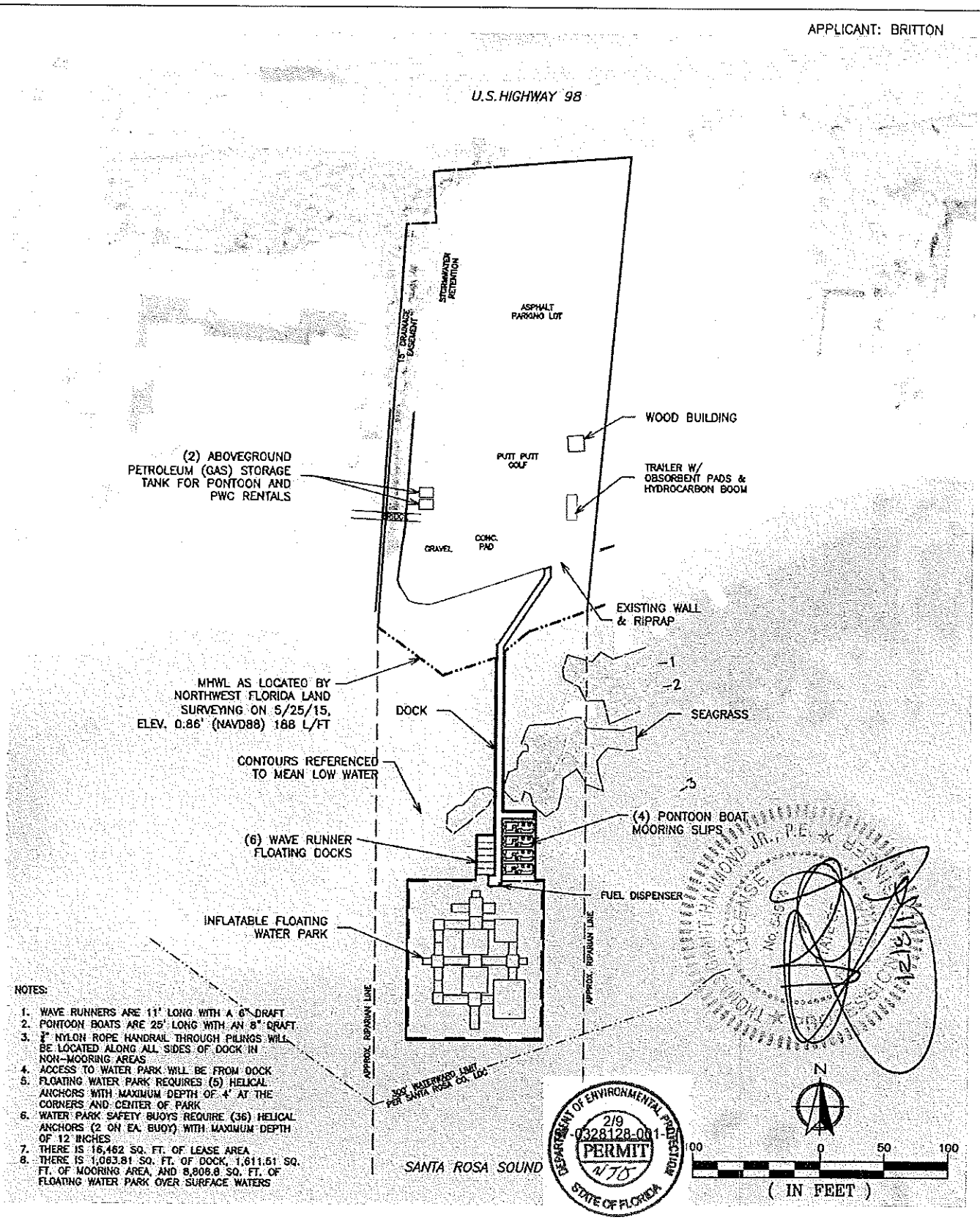

NOTES:

1. WAVE RUNNERS ARE 11' LONG WITH A 6" DRAFT
2. PONTOON BOATS ARE 25' LONG WITH AN 8" DRAFT
3. ½" NYLON ROPE HANDRAIL THROUGH PILINGS WILL BE LOCATED ALONG ALL SIDES OF DOCK IN NON-MOORING AREAS
4. ACCESS TO WATER PARK WILL BE FROM DOCK
5. FLOATING WATER PARK REQUIRES (5) HELICAL ANCHORS WITH MAXIMUM DEPTH OF 4' AT THE CORNERS AND CENTER OF PARK
6. WATER PARK SAFETY BUOYS REQUIRE (36) HELICAL ANCHORS (2 ON EA. BUOY) WITH MAXIMUM DEPTH OF 12 INCHES
7. THERE IS 16,462 SQ. FT. OF LEASE AREA
8. THERE IS 1,063.81 SQ. FT. OF DOCK, 1,611.51 SQ. FT. OF MOORING AREA, AND 8,808.8 SQ. FT. OF FLOATING WATER PARK OVER SURFACE WATERS

WETLAND SCIENCES INCORPORATED

ENVIRONMENTAL CONSULTANTS
3308 GULF BEACH HIGHWAY
PENSACOLA, FLORIDA 32507
TEL: 850.453.4700
JTAYLOR@WETLANDSCIENCES.COM

PROJECT NAME: NAVARRE FAMILY WATERSPORTS	
PLAN VIEW DEPICTED ONTO AERIAL	
PROJECT NO.: 2014-281	
BY: JAT	DATE: 12/2/2015
SHEET: 2 OF 9	

PERMITTING PURPOSES ONLY. NOT RELEASED FOR CONSTRUCTION

APPLICANT: BRITTON

PERMITTING PURPOSES ONLY. NOT RELEASED FOR CONSTRUCTION

NOTES:

1. WAVE RUNNERS ARE 11' LONG WITH A 6" DRAFT
2. PONTOON BOATS ARE 25' LONG WITH AN 8" DRAFT
3. ¾" NYLON ROPE HANDRAIL THROUGH PILINGS WILL BE LOCATED ALONG ALL SIDES OF DOCK IN NON-MOORING AREAS
4. ACCESS TO WATER PARK WILL BE FROM DOCK
5. FLOATING WATER PARK REQUIRES (5) HELICAL ANCHORS WITH MAXIMUM DEPTH OF 4' AT THE CORNERS AND CENTER OF PARK
6. WATER PARK SAFETY BUOYS REQUIRE (36) HELICAL ANCHORS (2 ON EA. BUOY) WITH MAXIMUM DEPTH OF 12 INCHES
7. THERE IS 16,462 SQ. FT. OF LEASE AREA
8. THERE IS 1,063.81 SQ. FT. OF DOCK, 1,611.51 SQ. FT. OF MOORING AREA, AND 8,806.8 SQ. FT. OF FLOATING WATER PARK OVER SURFACE WATERS

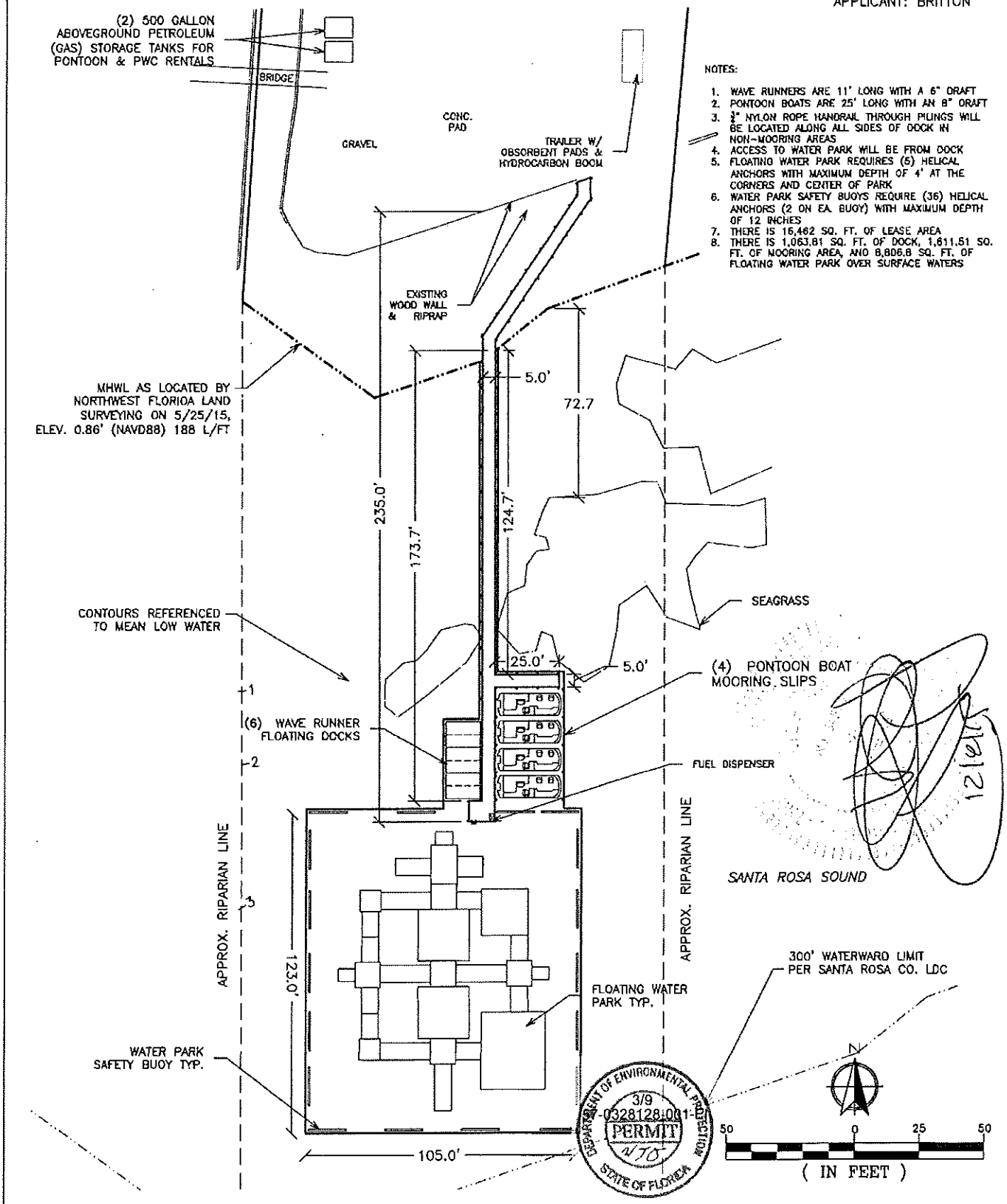

WETLAND SCIENCES INCORPORATED	ENVIRONMENTAL CONSULTANTS 3308 GULF BEACH HIGHWAY PENSACOLA, FLORIDA 32507 TEL: 850.453.4700 JTAYLOR@WETLANDSCIENCES.COM	PROJECT NAME: NAVARRE FAMILY WATERSPORTS
		PLAN VIEW
		PROJECT NO.: 2014-281
		BY: JAT DATE: 12/2/2015
		SHEET: 3 OF 9

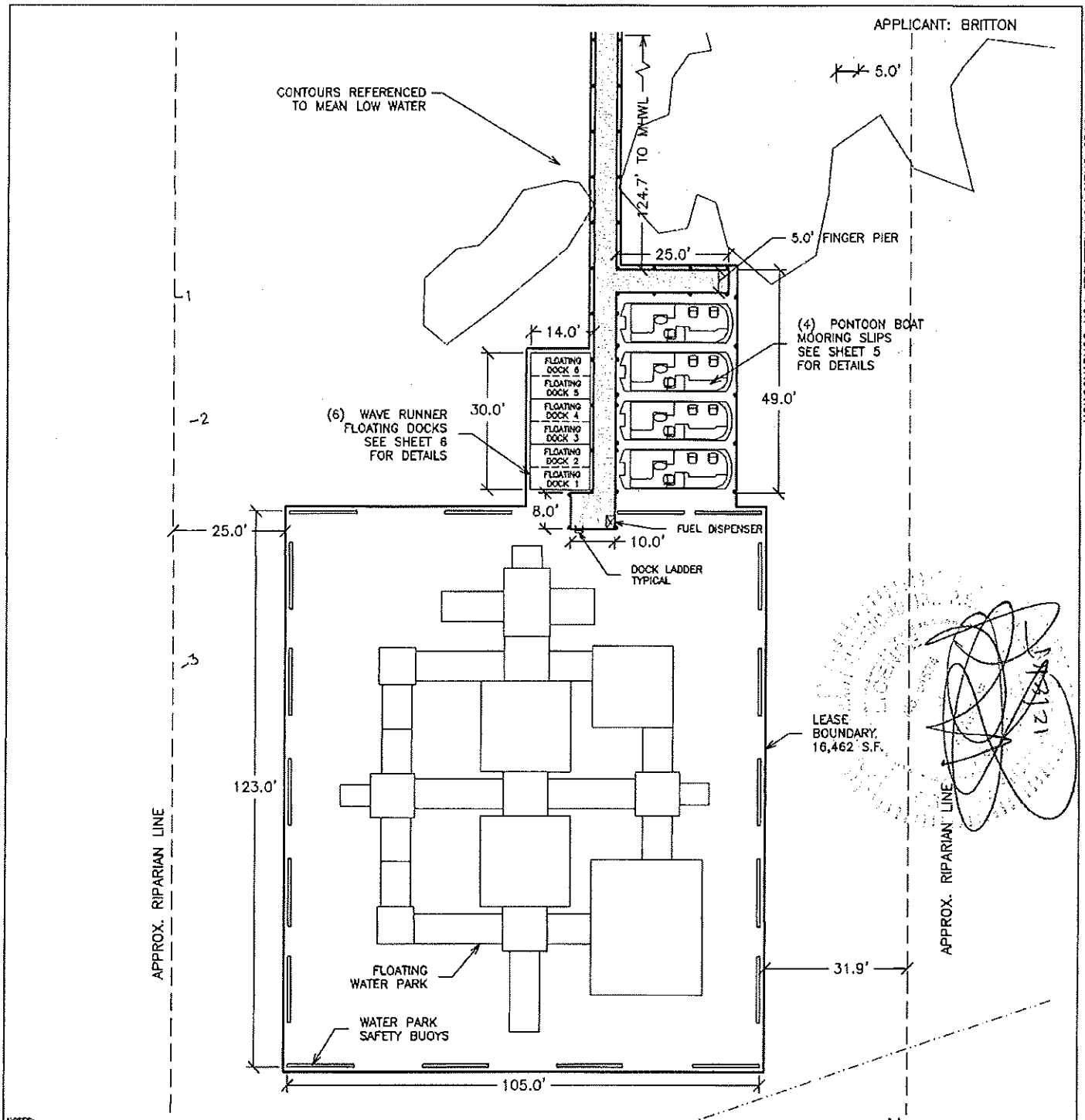

NOTES:

1. WAVE RUNNERS ARE 11' LONG WITH A 8" DRAFT
2. PONTOON BOATS ARE 25' LONG WITH AN 8" DRAFT
3. ½" NYLON ROPE HANDRAIL THROUGH PILINGS WILL BE LOCATED ALONG ALL SIDES OF DOCK IN NON-MOORING AREAS
4. ACCESS TO WATER PARK WILL BE FROM DOCK
5. FLOATING WATER PARK REQUIRES (6) HELICAL ANCHORS WITH MAXIMUM DEPTH OF 4' AT THE CORNERS AND CENTER OF PARK
6. WATER PARK SAFETY BUOYS REQUIRE (36) HELICAL ANCHORS (2 ON EA. BUOY) WITH MAXIMUM DEPTH OF 12 INCHES
7. THERE IS 16,462 SQ. FT. OF LEASE AREA
8. THERE IS 1,063.81 SQ. FT. OF DOCK, 1,611.81 SQ. FT. OF MOORING AREA, AND 8,808.8 SQ. FT. OF FLOATING WATER PARK OVER SURFACE WATERS

DEPARTMENT OF ENVIRONMENTAL PROTECTION
4/9
0328128-001-EI
PERMIT
NJ
STATE OF FLORIDA

PERMITTING PURPOSES ONLY. NOT RELEASED FOR CONSTRUCTION

WETLAND SCIENCES INCORPORATED

ENVIRONMENTAL CONSULTANTS
3308 GULF BEACH HIGHWAY
PENSACOLA, FLORIDA 32507
TEL: 850.453.4700
JTAYLOR@WETLANDSCIENCES.COM

PROJECT NAME: NAVARRE FAMILY WATERSPORTS	
CLOSE-UP OF FACILITY	
PROJECT NO.: 2014-281	
BY: JAT	DATE: 12/2/2015
SHEET: 4 OF 9	

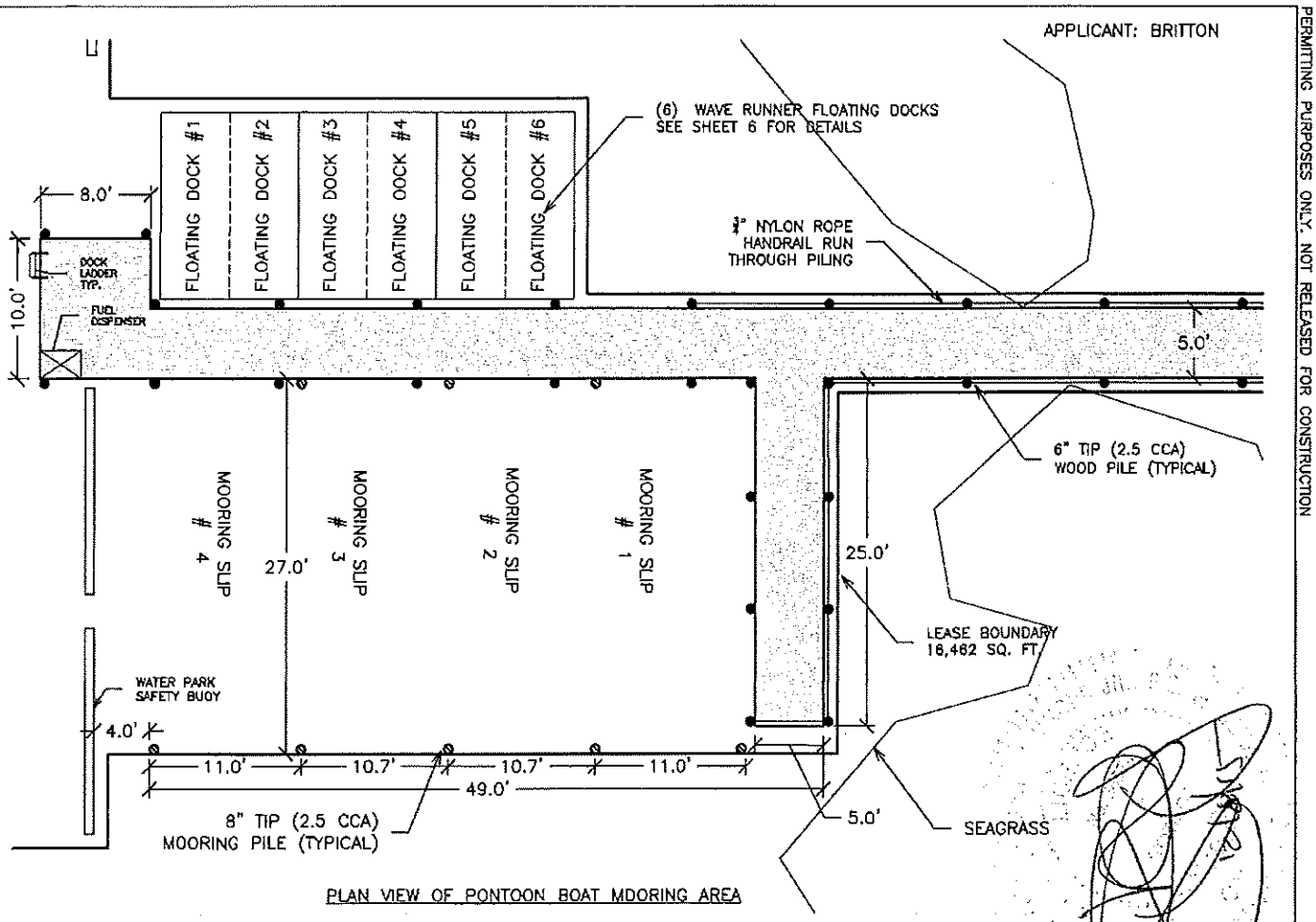

PLAN VIEW OF PONTOON BOAT MOORING AREA

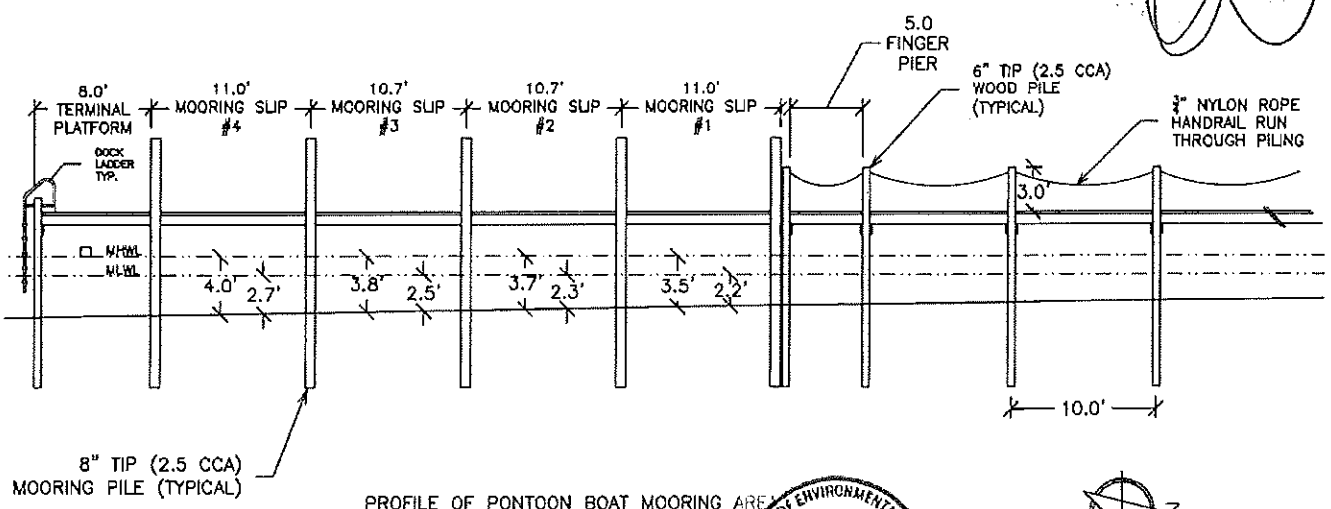

PROFILE OF PONTOON BOAT MOORING AREA

NOTES:

1. PONTOON BOATS ARE 25' LONG WITH AN 8" DRAFT

DEPARTMENT OF ENVIRONMENTAL PROTECTION 5/9 0328128-001-EI PERMIT N/TS STATE OF FLORIDA

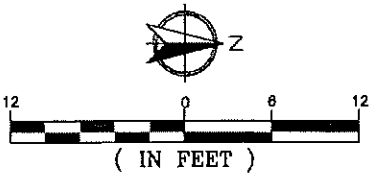

PERMITTING PURPOSES ONLY, NOT RELEASED FOR CONSTRUCTION

WETLAND SCIENCES INCORPORATED

ENVIRONMENTAL CONSULTANTS
3308 GULF BEACH HIGHWAY
PENSACOLA, FLORIDA 32507
TEL: 850.453.4700
JTAYLOR@WETLANDSCIENCES.COM

PROJECT NAME: NAVARRE FAMILY WATERSPORTS	
BOAT SLIP PLAN VIEW & PROFILE (TYP.)	
PROJECT NO.: 2014-281	
BY: JAT	DATE: 12/2/2015
SHEET: 5 OF 9	

APPLICANT: BRITTON

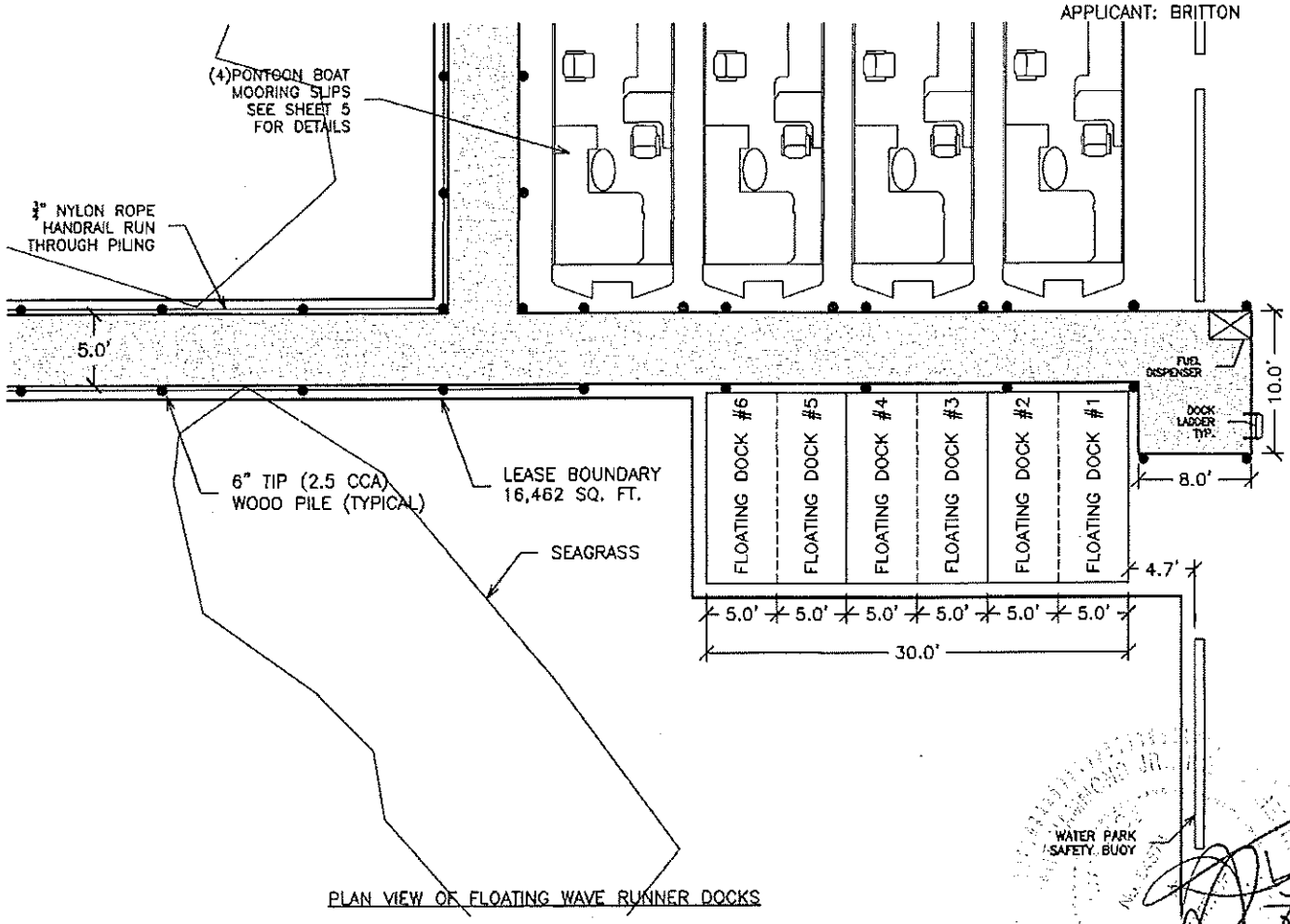

PLAN VIEW OF FLOATING WAVE RUNNER DOCKS

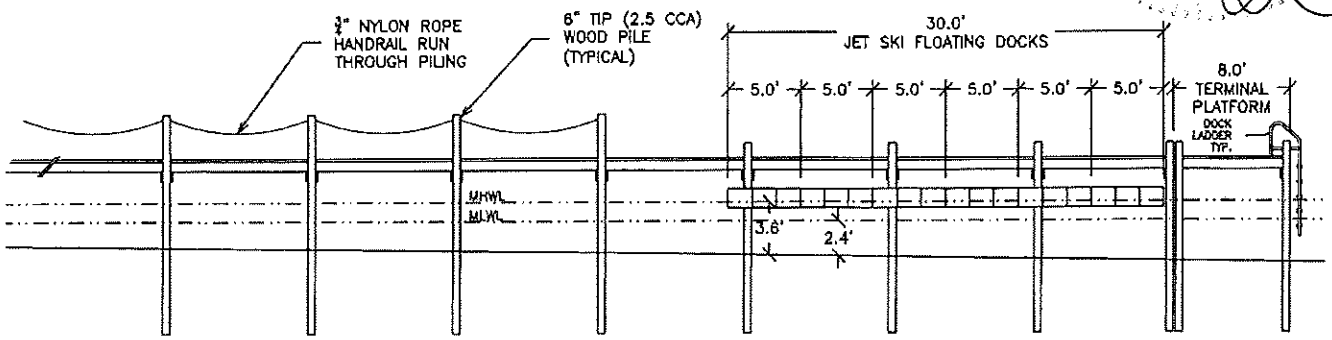

PROFILE OF FLOATING WAVE RUNNER DOCKS

NOTES:

1. WAVE RUNNERS ARE 11' LONG WITH A 6" DRAFT

DEPARTMENT OF ENVIRONMENTAL PROTECTION 6/9 0328128-001-EI PERMIT NTS STATE OF FLORIDA

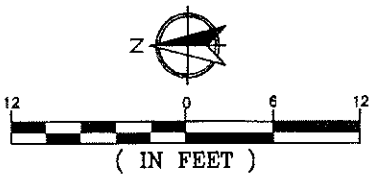

PERMITTING PURPOSES ONLY, NOT RELEASED FOR CONSTRUCTION

WETLAND SCIENCES INCORPORATED

ENVIRONMENTAL CONSULTANTS
3308 GULF BEACH HIGHWAY
PENSACOLA, FLORIDA 32507
TEL: 850.453.4700
JTAYLOR@WETLANDSCIENCES.COM

PROJECT NAME: NAVARRE FAMILY WATERSPORTS	
FLOATING DOCK PLAN VIEW & PROFILE (TYP.)	
PROJECT NO.: 2014-281	
BY: JAT	DATE: 12/2/2015
SHEET: 6 OF 9	

APPLICANT: BRITTON

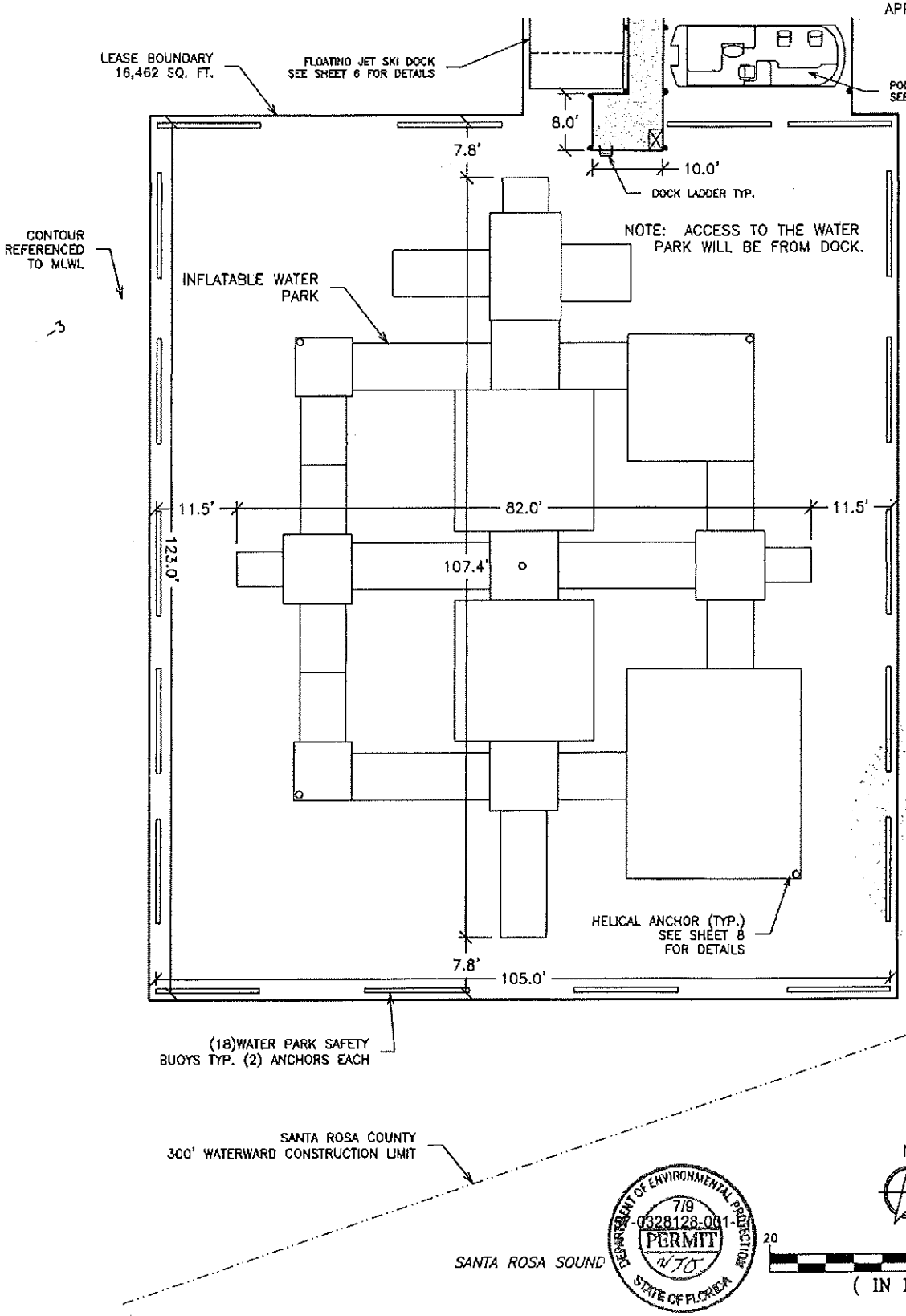

PERMITTING PURPOSES ONLY, NOT RELEASED FOR CONSTRUCTION

DEPARTMENT OF ENVIRONMENTAL PROTECTION
7/9
0328128-001-
PERMIT
STATE OF FLORIDA

WETLAND SCIENCES INCORPORATED

ENVIRONMENTAL CONSULTANTS
3308 GULF BEACH HIGHWAY
PENSACOLA, FLORIDA 32507
TEL: 850.453.4700
JTAYLOR@WETLANDSCIENCES.COM

PROJECT NAME: NAVARRE FAMILY WATERSPORTS	
CLOSE-UP OF WATER PARK	
PROJECT NO.: 2014-281	
BY: JAT	DATE: 12/2/2015
SHEET: 7 OF 9	

APPLICANT: BRITTON

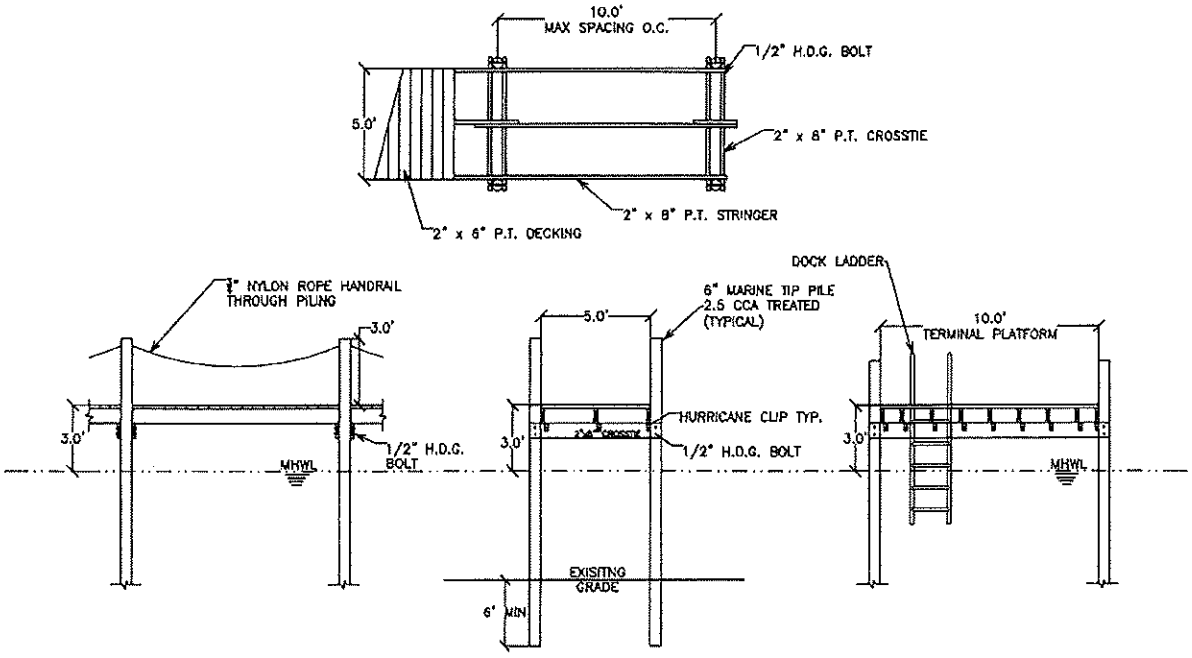

DOCK AND TERMINAL PLATFORM DETAILS (TYPICAL)

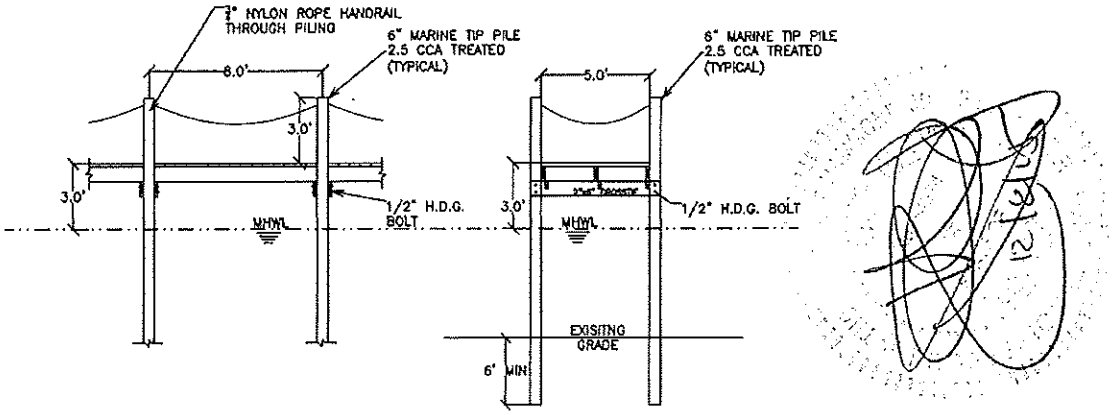

FINGER PIER DETAILS (TYPICAL)

DEPARTMENT OF ENVIRONMENTAL PROTECTION
8/9
0328128-001-
PERMIT
NTS
STATE OF FLORIDA

8 0 4 8
(IN FEET)

PERMITTING PURPOSES ONLY. NOT RELEASED FOR CONSTRUCTION

WETLAND SCIENCES INCORPORATED

ENVIRONMENTAL CONSULTANTS
3308 GULF BEACH HIGHWAY
PENSACOLA, FLORIDA 32507
TEL: 850.453.4700
JTAYLOR@WETLANDSCIENCES.COM

PROJECT NAME: NAVARRE FAMILY WATERSPORTS	
DOCK DETAILS (TYPICAL)	
PROJECT NO.: 2014-281	
BY: JAT	DATE: 12/2/2015
SHEET: 8 OF 9	

APPLICANT: BRITTON

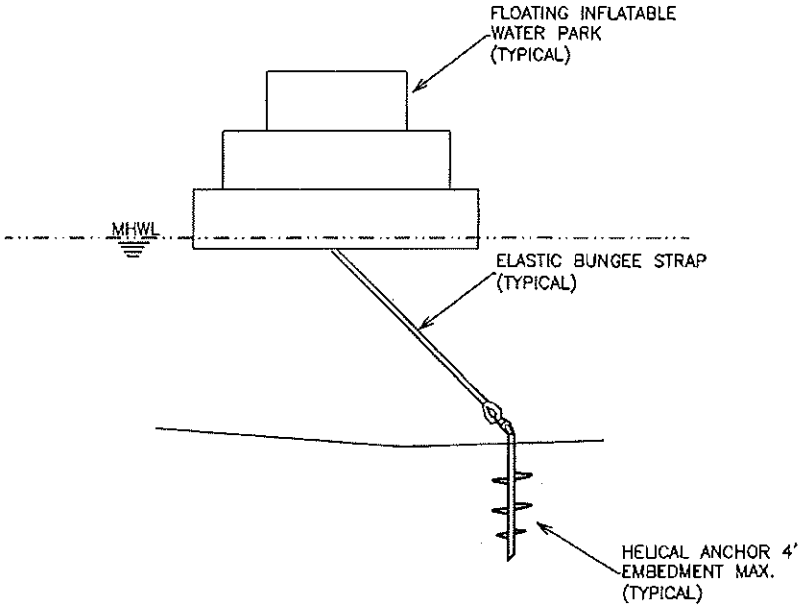

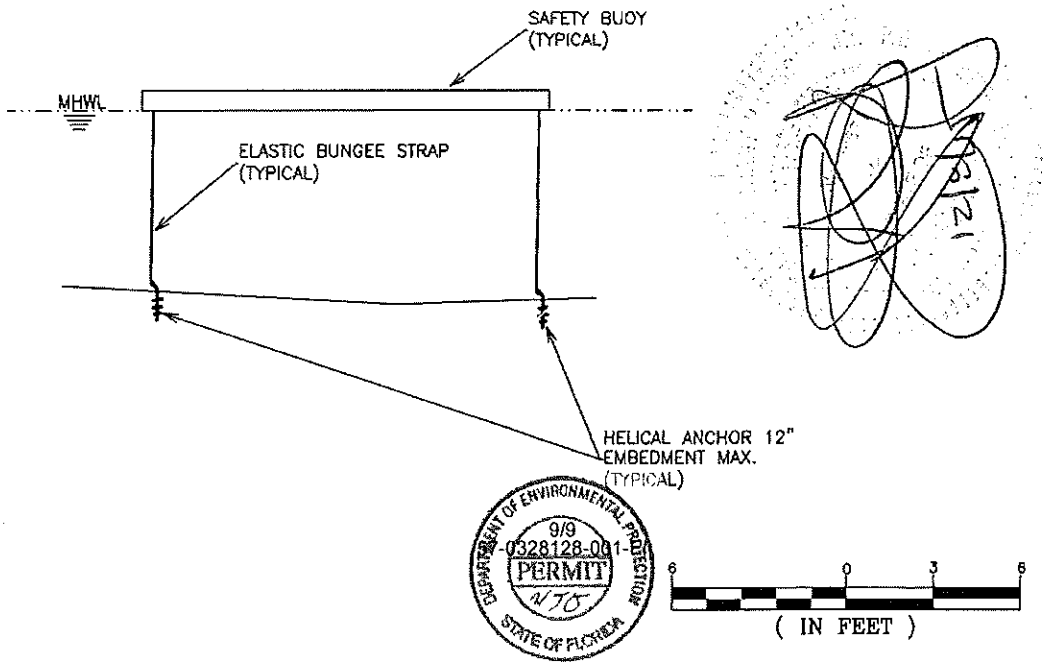

PERMITTING PURPOSES ONLY. NOT RELEASED FOR CONSTRUCTION

WETLAND SCIENCES INCORPORATED

ENVIRONMENTAL CONSULTANTS
3308 GULF BEACH HIGHWAY
PENSACOLA, FLORIDA 32507
TEL: 850.453.4700
JTAYLOR@WETLANDSCIENCES.COM

PROJECT NAME: NAVARRE FAMILY WATERSPORTS	
WATER PARK AND ANCHOR DETAILS	
PROJECT NO.: 2014-281	
BY: JAT	DATE: 12/2/2015
SHEET: 9 OF 9	

Oil Spill Containment and Contingency Plan

Navarre Family Watersports, LLC

Prepared by

Greg Britton

13 Calle Rio

Mary Esther Florida

November 2015

Table of Contents

1.0 Site Information ----------3

2.0 Description of Fueling Facilities and General Operating Policies----------3

2.0.1 Marina Description----------3

2.0.2 Fueling Equipment ----------3

2.0.3 Fueling Protocol----------4

3.0 Response Procedures ----------4

3.1 Information Requirements----------6

3.1.1 Location of Spill ----------6

3.1.2 Type of Pollutant Spilled----------6

3.1.3 Source of Spill----------6

3.1.4 Quantity of Spill ----------6

3.1.5 Actions Taken ----------6

3.1.6 Witnesses----------7

4.0 Available Clean-Up Equipment and Materials----------7

5.0 Oil Spill Contingency Plan Response Notice ----------7

6.0 Oil Spill Incident Log Sheet----------7

7.0 General ----------7

8.0 Penalty ----------8

FIGURE 1: Location Map and legal description ----------9

FIGURE 2: Site Map ----------10

EXHIBIT A: Oil Spill Contingency Plan----------11

EXHIBIT B: Oil Spill Incident Log Sheet ----------12

1.0 Site Information

Navarre Family Watersports, LLC is located just off of hi-way 98 in Navarre Florida. Its physical address location is as follows:

8671 Navarre Parkway

Navarre, FL 32566

LATITUDE 30° 24' 3.3732" N, LONGITUDE 86° 51' 37.7964" W

The fueling station is located at the western boundary of the property and will accommodate fueling from a dock.

Due to the proposed fueling facilities to be located on the GAC Property Management LLC property, there will be potential for fuel and/or oil spillage as a result of the number of waverunners and pontoons that will be fueled in the course of a day. Therefore, the Florida Department of Environmental Protection's (FDEP) requires a site-specific Oil Spill Containment and Contingency Plan to be constructed. This Oil Spill Containment and Contingency Plan was developed to fulfill this requirement.

2.0 Description of Fueling Facilities and General Operating Policies

2.0.1 Marina Description

The marina will be green treated wooden construction with rope side railings. It will have a fueling station located on the end of the dock for fueling pontoons and any watercraft that may need fuel in emergency situations. It is not the intention of Navarre Family Watersports to sell fuel, but it is the intention to help any watercraft in a low fuel situation as needed. There will be six waverunner slips on the western side of the dock and four pontoon slips on the eastern side of the dock see Figure 2.

2.0.2 Fueling Equipment

There are two 500 gallon fuel tanks located on the western edge of the property just to the north of the bridge on the western property. The fuel lines are ran underground in fuel rated hose specifically for gasoline use and are incased in PVC. These lines will be ran under the dock in PVC to the fuel station location. A shutoff switch is installed at the fueling station and an automatic shutoff fuel nozzle will be utilized to prevent over filling and splash out.

2.0.3 Fueling Protocol

Any trained and certificated watersports employee of Navarre Family Watersports will be able to perform fueling operations. A formal fuel/oil training program will be required that will cover the proper fueling of watercraft as well as the use of emergency spill equipment. All boat engines will be shutoff during refueling. The on-site manager will supervise all fueling operations and will be required to do a safety check monthly on all fueling equipment. No smoking signs will be publicly displayed. During all fueling operations smoking is prohibited by all individuals in the designated fueling area. All boats and waverunners will be refueled without any passengers aboard. Portable fire extinguishers will be conveniently located to service the fueling station. Upon completion of pumping the trained employee will shut the pump off and return the hose to the designated pumping station location prior to any other task.

3.0 Response Procedures

The potential of a fuel spill or spill of petroleum product into the Santa Rosa Sound include overtopping fuel tanks of receiving vessels, fuel/oil line ruptures or leaks, fuel line ruptures or leaks, bilge pumping, tank ruptures or a sunken vessel.

In the event of a spill, the following procedures will be initiated immediately:

1. Stop all engines and electrical devices within the vicinity of the spill. Secure all ignition sources.
2. In the event of spillage due to a known source, take the necessary action to terminate such source, i.e., shut off pump, block flow, repair leak, etc.
3. Prepare hoses and nozzles for "misting" or application of light spray over the water surface and the waterline of vessels.
4. In the event of a spill of flammable materials, notify the Navarre Fire Department of spill and fire potential **(850) 939-5236**. **In the event that the spill is life threatening or potentially destructive to property call 911 immediately.**
5. Initiate the appropriate containment procedures including deployment of sorbent materials and/or containment barriers to minimize the extent of the spill and damage to the environment. Every effort must be made to contain the spillage within the confines of the Navarre Family Watersports area.

6. All fuel or petroleum products spills over State Waters, regardless of size, are required to be reported as specified below. Any petroleum spills on land, greater than 25 gallons, or any spill that has the potential to affect State Waters shall be reported as specified below. Spills occurring in Santa Rosa Sound during fueling of boats shall be immediately cleaned up using absorbent pads that absorb fuel and not water. Spills on boat decks and gunnels shall also immediately be cleaned up.

Contact the FDEP at 1-800-320-0519, if spill causes a sheen on the surface water.

Contact the National Response Center at 1-800-424-8802 if spill causes a sheen on the surface water.

All significant spills (more than 25 gallons of petroleum product on ground and visible sheen on surface waters of Santa Rosa Sound) shall be immediately reported to FDEP at 1-800-320-0519 and the National Response Center (NRC) at 1-800-424-8802. The facility shall immediately cleanup and dispose of all spills as well as record and maintain records of all spills.

In the event that the spill is beyond the scope of Navarre Family Watersports containment materials and training the following company will be called to contract the cleanup effort:

SWS Environmental Services
Pensacola, FL 32534
Tel +1 (850) 969-0092
Tel +1 (877) 742-4215
Fax +1 (850) 969-0094

6. Notify Business Contacts as follows:

Greg Britton, Managing Member	**(850) 685-9801**
Dave Hicks, Operations Manager	**(850) 218-0742**

7. Notify the United States Coast Guard Marine Safety Office in Destin, Florida: **(850) 244-7147**

   7.1. Notification of the United States Coast Guard is required by Federal Law (33 USC 466, 18 CFR, Part 610). Failure to do so is a criminal offense with conviction carrying a mandatory $10,000 fine and a mandatory prison sentence of one year.

8. Notify the Florida Marine Patrol: **(850) 233-5150**

   8.1. Agency facility or vessel that suffers a pollutant discharge shall within one hour of discovery of the discharge, notify the Florida Marine Patrol or the United States Coast Guard. (Florida Administrative Code 16N-16 022)

   8.2. Notify the Santa Rosa County Health Department: **(850) 983-5200**

9. Notify these constituents within one hour, if necessary:

US Coast Guard National Response Center:	**(800) 424-8802**
State Warning Point 24 Hour	**(800) 320-0519**
Florida Fish & Wildlife Commission	**(800) 342-5367**

3.1 Information Requirements

In providing notification to the above-called entities, the information outlined brow should be reported if available.

3.1.1 Location of Spill

The location of the facility is at 8671 Navarre Parkway, Navarre FL 32566

3.1.2 Type of Pollutant Spilled

The type of petroleum products potentially subject to spillage may include gasoline or crankcase oil.

3.1.3 Source of Spill

The source of the spill may include fuel pumps, ruptured or leaking liues or hoses, leaking storage tanks, sunken vessel, bilge pumping, overtopping. if the spill is from a vessel the registration number of the vessel responsible for the spill shall be recorded.

3.1.4 Quantity of Spill

Estimates of the quantity of material presently in the water as well as an estimate of the continuing rate of discharge should be provided. The total amount which may ultimately be released should also be estimated. Description of small quantity spillage may be reported as "light" (sheen on water with rainbow colors), "moderate" (silver sheen on water not exhibiting conspicuous rainbow colors), or "heavy" (observable accumulation of product within water).

3.1.5 Actions Taken

Actions taken may include notifications, deployment of absorbents or containment booms, mobilization of clean-up contractor, termination of source of discharge, etc.

3.1.6 Witnesses

The names and telephone numbers of any witnesses which may be able to provide information on the circumstances surrounding the spill may be helpful.

4.0 Available Clean-Up Equipment and Materials

Navarre Family Watersports will provide trained personnel and material on-site to respond to certain types of spills. ABC extinguishers will be located at the fueling facility and at several other convenient locations on-site. Navarre Family Watersports will stock on the premises a minimum of 125 feet of oil sorbent hydrocarbon containment boom, and 10 hydrocarbon sorbent pads for immediate deployment. The spill containment equipment will be stored in the waverunner trailer on the eastern side of the uplands property directly east of the helicopter pad. The length of containment boom represents a factor of just five times the largest length of any vessel that Navarre Family Watersports operates. The hydrocarbon sorbent pads will be sufficient to absorb the largest expected spill within the Navarre Family Watersports Fleet. Fire equipment and spill containment equipment shall be inspected once a month and replaced every 5 years, or as necessary, depending on the circumstances.

5.0 Oil Spill Contingency Plan Response Notice

An Oil Spill Contingency Plan Response Notice is a brief set of instructions to be taken in the event of a spill.

6.0 Oil Spill Incident Log Sheet

The Oil Spill Incident Log Sheet must be completed as soon as possible after reporting the spill and taking the necessary actions to contain the spill and minimize environmental damage. A copy of the Oil Spill Incident Log Sheet is provided herein Exhibit B. It is the responsibility of the Operations Manager or their assistant to report and log the time of the spill and log the time that the US Coast Guard was notified of the spill.

7.0 General

All Navarre Family Watersports personnel must familiarize themselves with all procedures outlined herein to allow an efficient and effective response to any spill. In addition, all Navarre Family Watersports personnel must have a clear understanding of the following:

- The inventory, location, and operation of all fire fighting equipment and materials.
- Location of all circuit breakers and emergency cut-off switches.
- Location and routing of the fuel distribution lines
- The inventory, location, and operation of all spill containment and absorption material and equipment.

This Oil Spill Containment and Contingency Plan and its components shall be annually reviewed by the Navarre Family Watersports Management and updated for any new technology or equipment to maintain good status with the FDEP.

8.0 Penalty

It is a criminal offense by United States law for the person operating a fueling facility to not report a spill of petroleum products into the waters of the United States. Conviction carries a mandatory fine related to the extent of damage, the cost of cleanup, and the effectiveness of the control measures taken by the operator and his employees in obviating damage in the environment. The mandatory fine for conviction for spilling oil may be as low as $1.00 if the operator's contingency plan and responsive actions are effective in mitigating environmental damage.

Figure 1: Location Map And Legal Description

COM AT I/S OF SLY EXT OF C/L OF GRANADA ST & SLY R/W OF HWY 98 TH ELY ALONG R/W 774.97 FT TO POB TH CONT ALONG R/W 22.98FT TH N 07*29'41" W ALONG R/W 40 FT TH ELY ALONG R/W 155.56 FT TH S 01*05' W 302.60 FT TO PT KNOWN AS PT "C" TH CONT 20 FT TO S/L OF SANTA ROSA SOUND TH MEANDER WLY ALONG S/L 175 FT TO PT S OF POB TH N 25 FT TO PT S 72*09'46" W & 171.94 FTFROM SAID PT "C" TH CONT N 290.26 FT TO POB AS DES IN OR 1538 PG 632

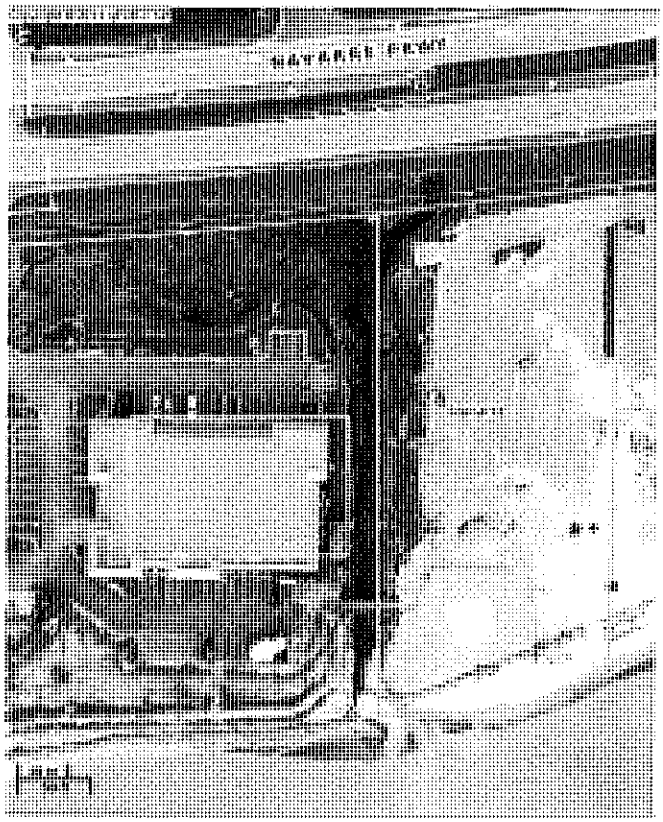

Fi
NAVARRE

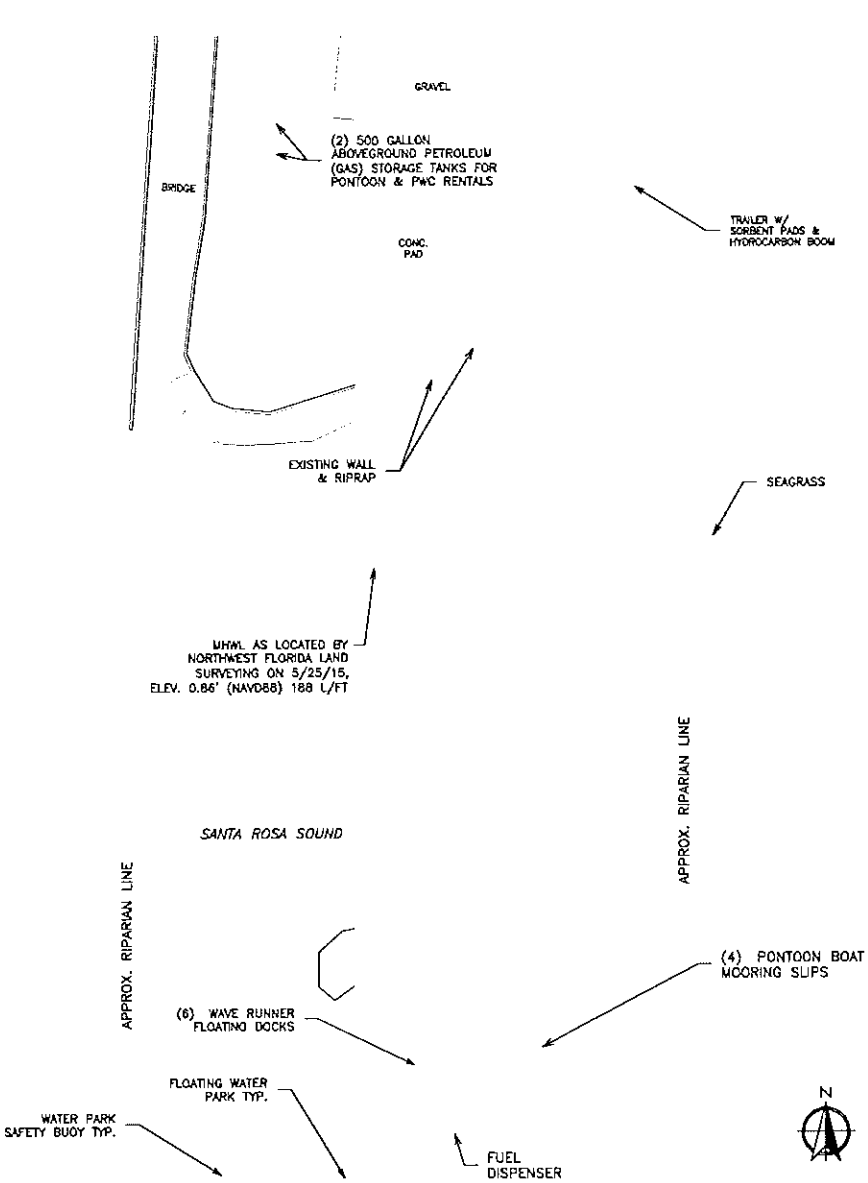

PERMITTING PURPOSES ONLY, NOT RELEASED FOR CONSTRUCTION

WETLAND SCIENCES INCORPORATED

3308 GULF BEACH HIGHWAY
TEL: 850.453.4700

S	NAVARRE FAMILY WATERSPORTS
	PLAN VIEW
	2014-281
	JAT 12/2/2015
	3 OF 9

Exhibit A: Oil Spill Contingency Plan
RESPONSE NOTICE

IN THE EVENT OF ANY SPILL OF PETROLEUM PRODUCTS INTO THE WATERS OF NAVARRE FAMILY WATERSPORTS, THE FOLLOWING ACTIONS MUST BE IMMEDIATELY TAKEN.

1. SHUT OFF FUEL EMERGENCY CIRCUIT BREAKERS LOCATED NEAR FUEL TANK AND SWITCH IN FUELING STATION SHED.
2. SECURE ALL IGNITION SOURCES AND ELECTRICAL DEVICES IN THE VICINITY OF THE FUEL SPILL.
3. TURN OFF FUEL VALVES LOCATED AT THE TANK.
4. NOTIFY THE NAVARRE FIRE DEPARTMENT: 850-939-5326. IN THE EVENT THAT SPILL IS LIFE THREATENING OR POTENTIALLY DESTRUCTIVE TO PROPERTY, CALL 911.
5. IF POSSIBLE, TERMINATE SOURCE OF SPILL AND IMPLEMENT CONTAINMENT PROCEDURES.
6. CALL The US COAST GUARD MARINE SAFETY OFFICE IN DESTIN, FLORIDA: 850-244-7147.

BE PREPARED TO GIVE THE FOLLOWING INFORMATION:

A. LOCATION:

- THIS IS NAVARRE FAMILY WATERSPORTS IN SANTA ROSA COUNTY, FLORIDA
- WE ARE LOCATED JUST EAST OF THE NAVARRE BRIDGE. THE ADDRESS IS: 8671 NAVARRE PARKWAY, NAVARRE FL 32566.
- LATITUDE 30° 24' 3.3732" N, LONGITUDE 86° 51' 37.7964" W

Exhibit B: Oil Spill Incident Log Sheet

OIL SPILL INCIDENT LOG SHEET

Date		Time		
vessel involved				
Reported By				
Wind				
Spill Drift Direction & Estimated Recovery Area				
Health & Safety Issues	Has source of spill been isolated?	YES	NO	
	Are any odors detectable from Spill?	YES	NO	
	Are flammability checks required?	YES	NO	
Type of Spill	Gasoline _____ Oil _____			
Area Affected	Length (Feet)	Width (Feet)		Area (Length x Width)
Estimated Volume of Spill	**Total Estimated Volume (Gal):**			
Physical Appearance	1. Rows Small Patches Large Patches Continuous Slick 2. Light (rainbow colored sheen) Moderate (Silver colored sheen) Heavy (observable quantities visible)			
Other Considerations	Verification of spill by Navarre Family Watersports Manager on Duty. **Yes/No** Is there a hazard to navigation? **Yes/No** Should an exclusion zone be established? **Yes/No** Weather Forecast Known? **Yes/No** Do any vessels in vicinity require notification? **Yes/No**			
Notifications	Navarre Fire Department:	Time: _____		
	Contracted Spill Management Service:	Time: _____		
	US Coast Guard Marine Safety:	Time: _____		
	Florida Marine Patrol:	Time: _____		
	Okaloosa County Health Department:	Time: _____		
	Within 1 Hour:			
	US Coast Guard National Response Center	Time: _____		
	State Warning Point 24 Hour	Time: _____		
	Florida Fish & Wildlife Commission	Time: _____		
Supervisor on Duty				