CURVE DATA "A"
RADIUS = 50.00'(D&F)
DELTA = 38°01'00"(D) 37°52'48"(F)
LENGTH = 33.19'(D) 33.06'(F)
CHORD = 32.58'(D) 32.46'(F)
BEARING = S40°04'32"W(D) S41°05'39"W(F) S40°54'32"W(C)

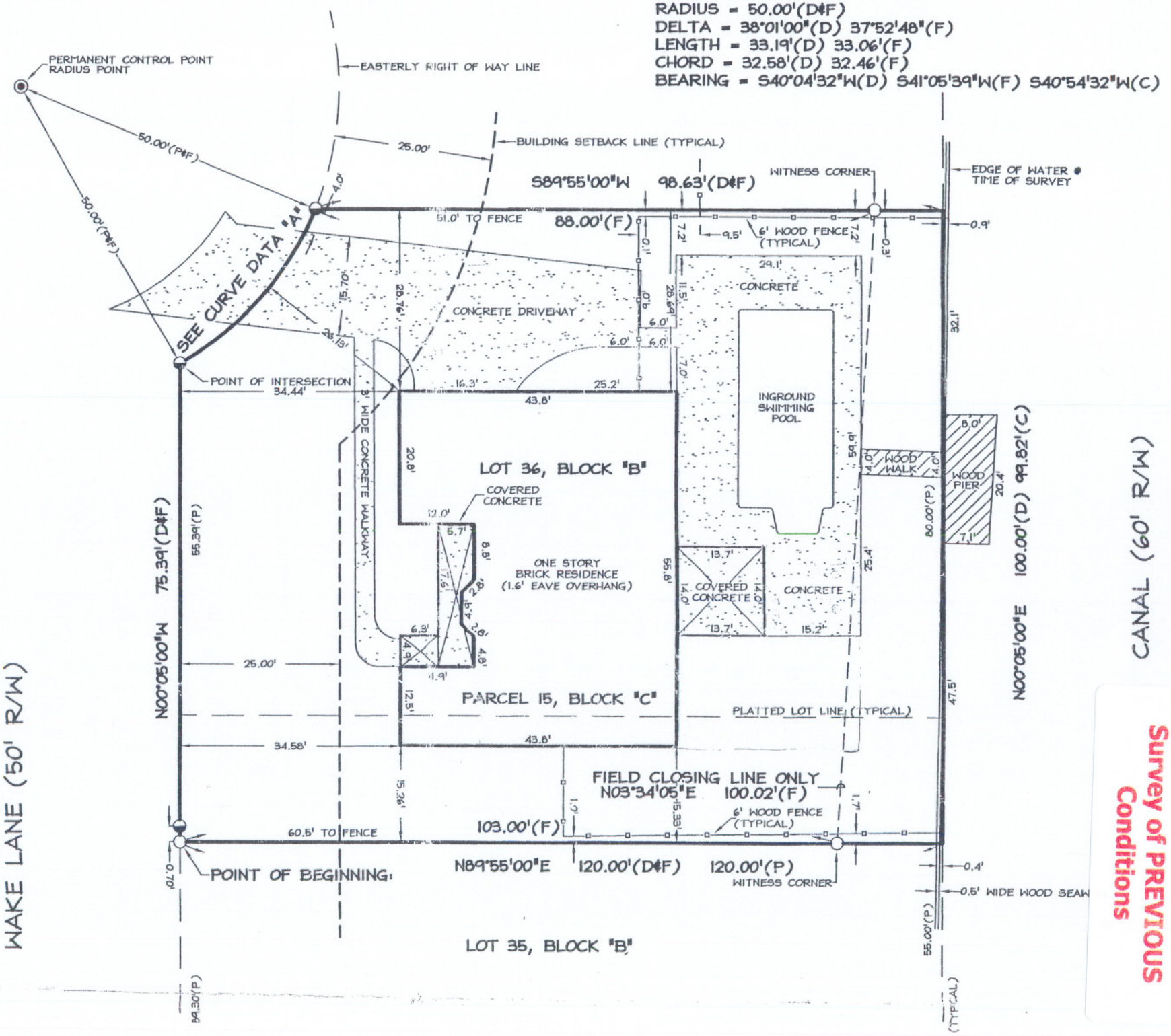

2007-V-087
Survey of PREVIOUS Conditions

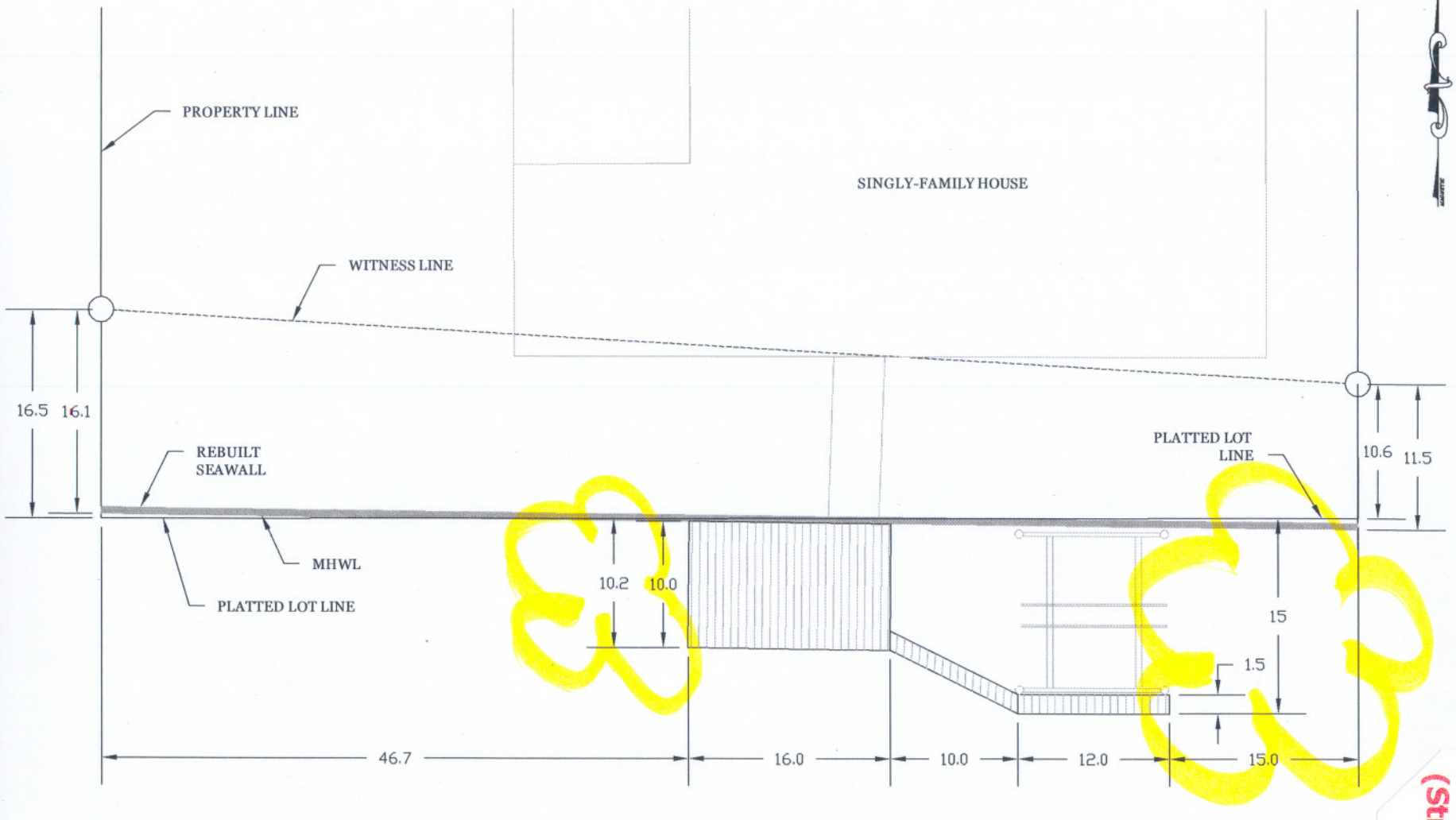

MAN-MADE CANAL

APPLICANT: F
PA

2007-V-087
Proposed Site Plan
(Structures HAVE BEEN constructed)

WETLAND SCIENCES INCORPORATED

CLOSE UP PLAN VIEW OF DOCK STRUCTURE

PROJECT # 2007-165	DATE: JULY 6, 2007
DRAWN BY: JAT	SCALE: 1" = 12'

12 0

(IN FEET

GRAPHIC SCALE

4 0 2 4

(IN FEET)
1 inch = 4 ft.

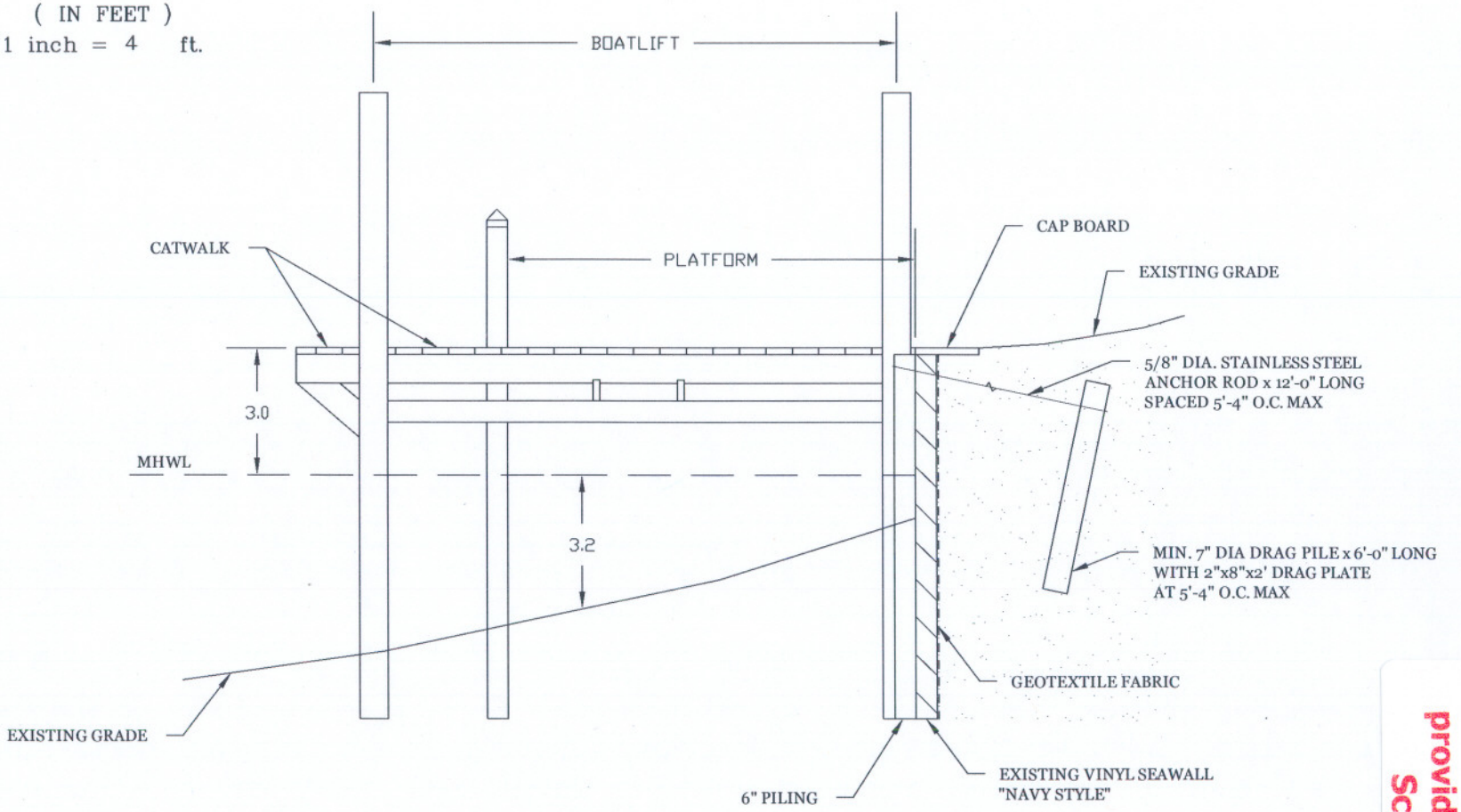

WETLAND SCIENCES INCORPORATED

PROFILE OF SEAWALL AND DOCK

PROJECT # 2007-165	DATE: JULY 6, 2007
DRAWN BY: JAT	SCALE: 1" = 4'

APPLICANT: PARSON
PAGE 5 OF

2007-V-087
Letter & Information
provided by Wetland
Sciences Inc.