Make Mitigation Happen

Mitigating your home could translate to savings and peace of mind.

What
What is wind mitigation? Wind mitigation includes specific activities to strengthen your home. This booklet will review what can be done to strengthen your home.
Page 2

Why
Every year Floridians face damage to their homes as a result of high winds.
Page 3

Load Path
A continuous load path and roofing protections are the key components of protecting the structural integrity of your home during a storm. Learn a variety of activities that can help strengthen your home.
Page 5

Protect Openings

Protecting openings by shuttering or replacing with high-standard products.
Page 10

Florida Law and Insurance Discount Notification Form
Florida Statute 627.711 Notice of premium discounts for hurricane loss mitigation; uniform mitigation verification inspection form.
Page 13

Preparedness Checklist
Protecting your home from high winds is a part of being prepared. Have a plan. Use this checklist to help you prepare for disasters.
Page 19

Letter from Director Bryan Koon

Prior to joining Florida's Division of Emergency Management Director Koon served as the Director for Walmart's Emergency Management Department and worked at the White House Military Office for seven years. Director Koon also served as a surface warfare officer in the US Navy.

Florida has been fortunate to avoid major catastrophic damage over the last few hurricane seasons. While many become complacent, this training and booklet are meant to engage you in actively preparing your home for future hurricanes. It is a matter of time before the next major hurricane impacts Florida.

Will your home, your family and you be ready to survive and recover from the next major hurricane to impact your community?

Hurricane Mitigation

This guide provides insight into proven, researched activities that directly improve your ability to recover from a hurricane. Please take time to review the activities, properly mitigate your home against damage caused by high winds and join the effort throughout Florida to survive the next hurricane.

Together we can demonstrate that investing in the homes of our citizens can improve Florida's recovery from future disasters.

Take the time to Get A Plan! and prepare your home.

- Bryan Koon

WHAT IS WIND MITIGATION?

Shutters can be seen, so they are the first things most people think of when protecting their home against high winds. But shuttering windows is only one of the recommended activities. It's what you can't see that can make a big difference.

Mitigation is defined as a noun that is the lessening of the force or intensity of something unpleasant. Wind mitigation specifically targets the structural and nonstructural aspects that prevent or lessen damage caused by high winds that occur with storms.

In Florida, our primary concern is the wind damage caused by hurricanes. Hurricane season begins June 1 and ends November 30. That means for five of twelve months of every year, Floridians are at risk for exposure to high winds. Also, it is not unusual to have a hurricane or tropical storm outside of hurricane season.

The first step is to have an inspection of your home. Obtaining an inspection generally costs, but is well worth the investment to fully mitigate your home. Activities to mitigate your home are research based recommendations.

Multiple organizations including the Florida Department of Financial Services, Florida Division of Emergency Management, Florida's Foundation, Florida Alliance for Safe Homes, and the Insurance Institute for Business and Home Safety all endorse the same research based recommendations and provide resources to inform and assist homeowners. See more information in the Disaster Preparedness Organizations section.

But what is wind mitigation? What actions or changes constitutes mitigating your home?

The primary damages from hurricanes are wind and water intrusion[1]. Water, as rain directed by varying wind directions, enters homes through gable ends, soffit vents and poorly sealed windows and doors. Once rain enters homes mildew can develop within days. Like water, wind causes damage by entering the home through poorly sealed openings. Wind damages homes by increasing pressure and causing uplift forces on the roof.

[1] *Summary Report on Building Performance 2004 Hurricane Season*
FEMA 490 / March 2005

WHY MITIGATE?

FEMA's Federal Insurance and Mitigation Administration participated in a study that estimated the value of all mitigation activities funded between mid-1993 through mid-2007. This study included mitigation of floods, hurricanes and earthquakes. The study concluded a value of $4 saved in response and recovery for every $1 spent on mitigation.

The Florida Department of Finance states that 15% - 70% of your insurance premium could be attributed to wind-damage risk.

For the majority of homeowners, their home is their largest asset, the primary source of shelter and holds unlimited sentimental value. Truly the value of the mitigation will only be seen if impacted by a hurricane. Strengthening your home against high winds will hopefully prevent any catastrophic damage to your home in the event of a hurricane.

By protecting your greatest asset you will minimize the expense of recovery and speed the time it takes to recover from a natural disaster.

No amount of strengthening of your home should ever cause you to disregard evacuation orders.

Safety

Too often people wonder why damage occurred after a disaster. Wind mitigation is meant to avoid a hazard by reducing the amount of damage to your home and reducing the amount of debris that may result in damage to other homes and speed cleanup efforts. The steps to mitigating your home that follow in this manual are research-based activities that will help minimize the damage to your home. Ideally in the event of a disaster, your home will be waiting when you return.

The arm bands of hurricanes often spawn tornados or generate gusts of wind so strong that objects, trees and other debris can cause extensive damage regardless of your mitigation efforts.

Recovery

Community recovery from a disaster doesn't take one or two years. It can take five years before a community recovers jobs, housing and revenue lost from a disaster.

You evacuate to a shelter and then come home - from here let's imagine two different scenarios.

Scenario A - A large piece of the roof to your home is missing, there is significant water damage to three rooms of your house and four windows are shattered. Clearly this is not a safe environment and mold will grow within days.

Scenario B - There is minimal damage to your roof due to a tree leaning on your home. There is minor water damage in your living room and is manageable by placing a tarp on your roof. You are back in your home after one night in a shelter.

Which scenario would you prefer?

Economic

627.711 F.S. requires insurance companies to notify homeowners of premium discounts for hurricane loss mitigation and establishes a uniform mitigation verification inspection form.

If your home has undergone a wind inspection you are potentially eligible for insurance discounts or credits.

Beyond insurance savings - the value of your home increases and there are cost savings when a disaster occurs. These savings are dependent on many different variables and cannot be predicted.

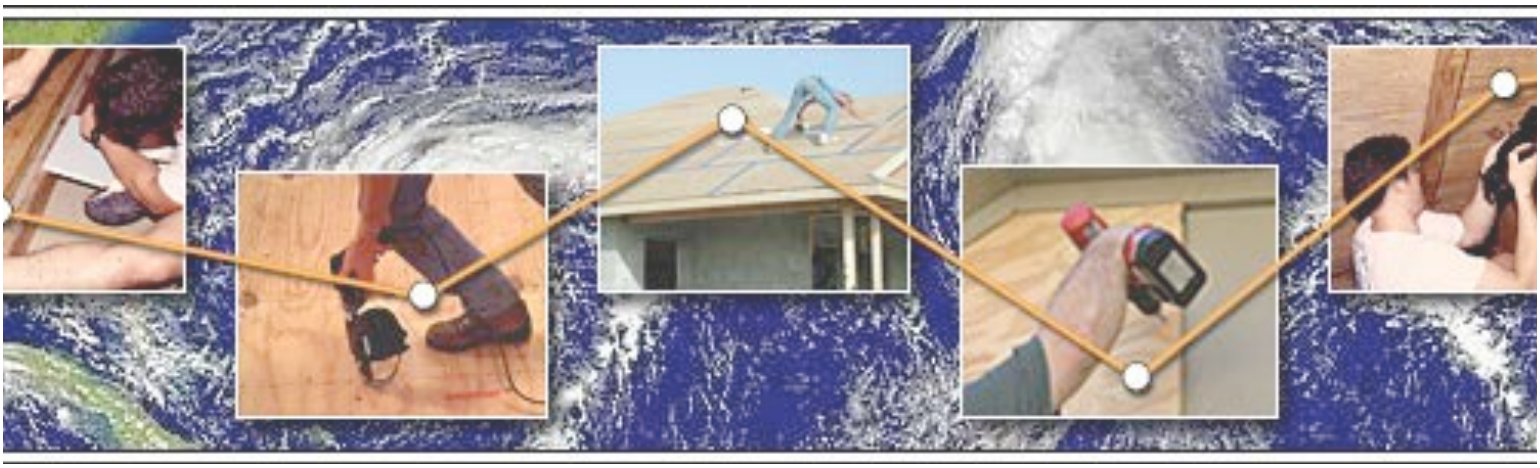

Types of Mitigation

Shutters can be seen, so they are the first things most people think of when protecting their home against high winds. But shuttering windows is only one of the recommended activities. It's what you can't see that can make a big difference.

Water Barriers

Providing a sealed roof deck will prevent significant water intrusion if pieces of your roof coverings (shingles) are blown away. This also provides additional insulation to make your home more energy efficient.

Don't forget your soffit vents!

Anchoring, Roof-to-Wall

Reinforce your foundation-to-wall, floor-floor (multistory homes) and wall-to-roof connections to establish a continuous load path. A continuous load path allows your home to resist high-wind forces as a unit. Weak links in a load path are generally where damage occurs.

Gable Ends

Gables that are taller than 4 feet will benefit from reinforcing the framing and bracing the top and bottom of the gable. Generally, a licensed professional engineer is best to design a gable end bracing system appropriate for your specific location and home construction.

Window Openings

There are many options for window openings. Shatterproof glass windows are expensive, but eliminate the need to shutter before a storm.

Clear, lightweight, cloth, electric and roll-down shutters exist to assist persons with varying disabilities.

Doorways

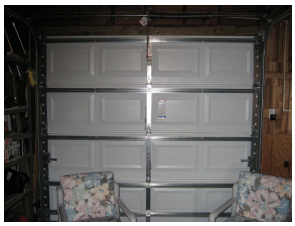

Doors, including garage doors, are best replaced with a hurricane-rated door.

For existing garage doors additional bracing can be applied. Hurricane-rated garage doors are heavier and often in a storm power is lost, so electric openers won't work.

The following specifications apply to the 2007 Florida Building Code. Once the 2010 Florida Building Code becomes effective specifications will vary.

Water Barriers

Water can devastate a home by direct damage and by fostering the growth of mold and mildew. The best mitigation is to prevent water from entering your home.

Establishing a water barrier is cost-effective when replacing your roof. At that time it is easiest to replace damaged boards and place a water barrier on the roof deck. Allowable methods and products vary based on local building codes, so please check with your local building department.

First, inspect the roof deck. If any boards are warped, damaged or deteriorating, replace them. Secure all boards with an 8d ring shank nail. Re-nail sections if needed. A ringed shank (grooves in the nail) provides more secure grip and prevent forces pulling the nails out of the wood. Recommended spacing is a maximum of 6 inches on-center. Follow manufacturers guide for

spacing in high-wind areas. Once the integrity of the roof deck is confirmed you can seal the deck.

On the roof deck you can tape the horizontal and vertical seams with a 4″ or wider self-adhering membrane tape followed by a synthetic underlayment. Self-adhering tape may have difficulty adhering to the surface due to the texture, any wax added and general job-site conditions. A primer may be needed to secure attachment of the tape.

For the underlayment, the Institute for Business and Home Safety recommends a code compliant 30-pound ASTM D226, Type II underlayment and attached using annular ring or deformed shank roof fasteners with minimum 1-inch diameter caps. Metal caps are recommended where wind speeds may exceed 140 mpg.

When buying asphalt shingles verify the technical standards for the product. The highest standard is currently over 130+mph winds and should be installed using the number of fasteners recommended by the manufacturer for high-wind areas. In some areas, local building code requires more fasteners than the manufacturer's recommendation.

Other roof coverings, such as metal panels and tiles (clay and concrete), require strict adherence to manufacturer's and local building department's recommended installation to ensure required uplift resistance.

Chimneys over 5 feet above the roof and/or on the side of the home should be anchored. It is best to have a licensed engineer to ensure adequate stability.

There also now options for roof vents that have passed wind-driven water tests and prevent water intrusion. Consider replacing existing roof vents.

If you are not considering a roof replacement or any major roofing repairs, you may still strengthen your existing roof by re-nailing the sheathing using 8d ringed shank nails and by providing a water barrier on the underside of the roof deck.

Spray-on polyurethane foam adhesives provide additional anchoring of the roof deck and is an acceptable water barrier. This is messy! Documentation of application from a properly trained and qualified applicator is generally required for insurance discounts.

Gable Vents

Winds from hurricanes and thunderstorms can vary directions and push water into vents causing extensive mold and mildew damage. Vents should be covered with a nonporous material. Covering gable vents can be difficult due to the height of most gables ends, but you should be able to access the vents from the attic. Vent covers can be installed inside the attic.

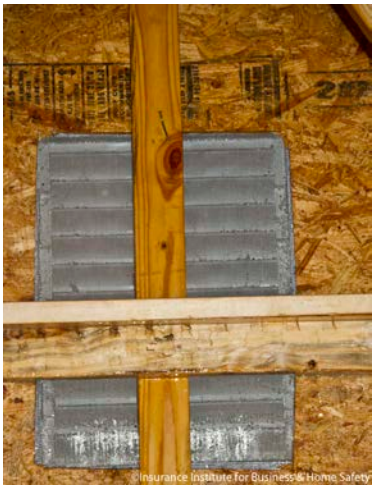

Soffits and Vents

Like a roof deck, soffits should be inspected for damage, cracks, weaknesses and deteriorated material. Building standards for soffits have changed for high-wind prone areas and you should check with your local building department to verify current standards. When strengthening the roof-to-wall anchors, you will have to remove the soffits, and it will be the perfect time to replace the soffits and ensure proper installation.

Follow manufacturers instructions for installation in high-wind zones. Ensure soffits are properly anchored to the overhang and to the wood along the building length. Spacing of anchors should be 12 inches of center.

A polyurethane sealant can be used to secure aluminum or vinyl soffits and seal the gap between the track and wall.

Wood soffits have not had a high failure rate during storms and are generally properly anchored, but the same techniques of anchoring and applying sealant can be used to further secure wood soffits.

Insurance savings vary by company, location and your specific home. If you have multiple mitigation features, the percentages below cannot be combined. In general, water barrier improvements include the following savings:

<u>Roof Covering:</u>

Approved shingles - 11%

Concrete roof - 82%

<u>Secondary Water Barriers:</u>

Self-adhesive tape and foam - 6%

The following specifications apply to the 2007 Florida Building Code. Once the 2010 Florida Building Code becomes effective specifications will vary.

Anchoring, Roof-to-Foundation

Anchoring your home is time consuming and labor intensive, but worth the investment to establish a continuous load path.

A continuous load path, in laymen's terms, is the function of your house as whole, not components of a foundation, walls and a roof. By anchoring the walls to the foundation, the first floor to the second floor and the walls to the roof, you establish a connection of roof to foundation and your home can resist the various forces that exist when winds push on your roof and walls, and penetrate your home.

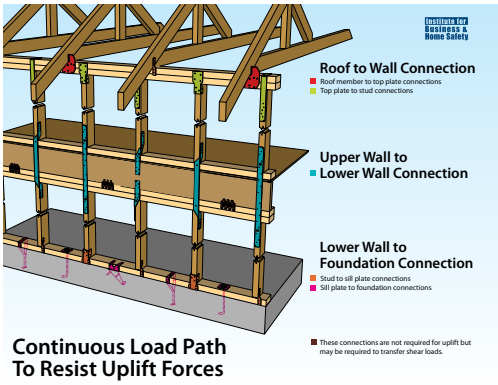

A roof tie-down, like roofing, is easiest done with new construction, re-roofing or major remodeling. On existing homes this generally encompasses the removal of the soffit to expose where the rafters meet the wall framing. Most homes have a standard connection on one side of the beams. For high-wind resistance, metal connectors are bolted to both sides where the rafter and the wall frame meet. A double wrap connector is a continuous connector in the shape of a modified U to fit the framing.

Many varieties of connectors are manufactured to meet the wide variety of connections that could exist between the rafters and the walls. Every connection, every joint must be secured.

Local building departments generally require permits which will leave the soffits uncovered until a post-inspection of work is completed. Work closely with your local building department to minimize this exposure time.

Upper wall to lower wall connections exist with a multistory home. This connection is not required for single story homes. The connector/hurricane strapping for the upper wall to lower wall connection is a solid steel connector that requires the removal of siding on existing homes.

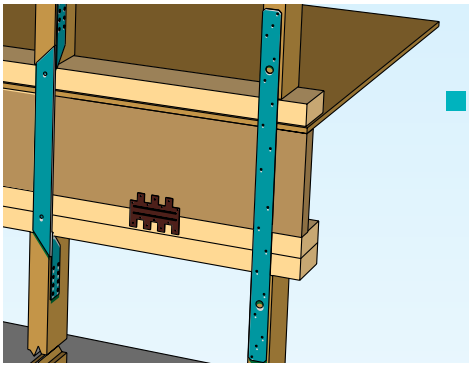

Wall to foundation connectors and reinforcements generally require the removal of siding on existing homes. Block and brick walls require steel rod supports to be added. Like roof to wall connections, every joint should be secured. Seek the guidance from a licensed contractor or engineer with experience in mitigating for high-winds.

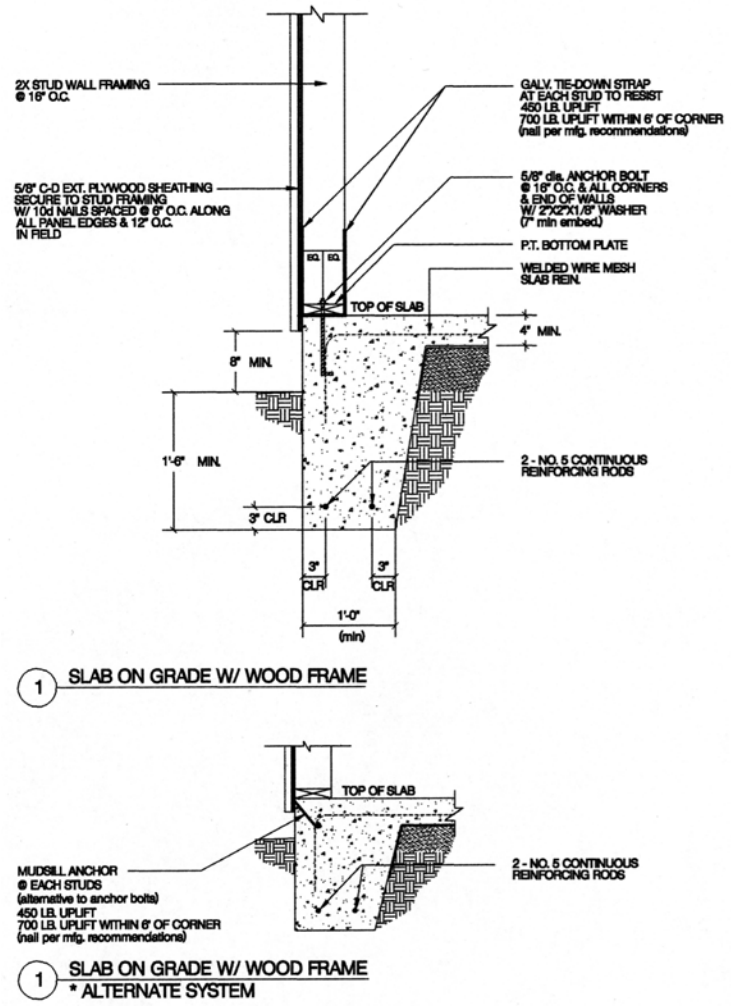

Porches that are connected to the house or that share a common roof should be mitigated and attachments strengthened. Enclosed porches should be shuttered as well to minimize uplift forces.

Reinforce wood porch frames much as you would the roof-to-wall and wall-to-foundation for the home. A variety of connectors and strappings are made to support frames at the base and roof joints.

Aluminum porches and screen frames (often found around pool decks) are not designed to withstand hurricane force winds. As most aluminum porches are attached to the boards at the eaves of homes, the best mitigation is to ensure the board is well-reinforced to the roof structure to ensure the board continues connection to the home if the aluminum frame is damaged.

Insurance savings vary by company, location and your specific home. If you have multiple mitigation features, the percentages below cannot be combined to estimate an overall discount.

In general, anchoring your home includes the following savings:

<u>Roof-to-wall connectors:</u>

Clip anchors - 35%

Single wrap anchors - 35%

Double wrap anchors - 35%

Gable Ends

The following specifications apply to the 2007 Florida Building Code. Once the 2010 Florida Building Code becomes effective specifications will vary.

Gable ends over 4 feet tall should be reinforced. Gables are typically the highest point of a home and are exposed to the highest-force winds.

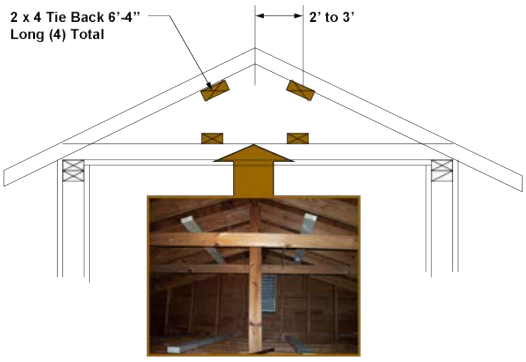

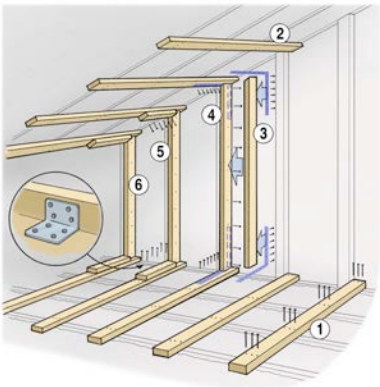

Gable ends respond to pressure within the house by bowing in and out. This action looses the connections to the wall and roof. When reinforcing the roof-to-wall connections at the gable ends, also make sure you reinforce the connections at the base of the gable end to the wall below.

Mitigating gable ends includes two primary activities. First, by reinforcing the connections to the roof and the wall below. The second activity is to place four horizontal beams two to three feet from the point of the gable end. Horizontal beams should be at least six feet and long enough to connect to at least three attic floor framing boards and extend 2 1/2 feet past the third board. If there is a gap in connecting the horizontal beam to the gable wall, which is more common in block homes, use a wood shim to close the gap. The reinforcement of horizontal beams against the gable minimizes the bowing that occurs as pressure within the house varies during a storm.

In the picture above, the added horizontal frames are painted white so the mitigation is clear. When installing the horizontal beams, it may be best to install the lower beams first to extend the walking surface in the attic. Make sure you do not pinch wires between the boards as this may result in a fire hazard.

In some cases, an engineer may recommend multiple vertical beams attached to an existing stud and connecting to the horizontal beam. This creates a U-shape against the gable end wall. Connect the beam with an L-shape strap and reinforce with a block of wood at the joint to further compress the connection. The top of the retrofit stud should be cut square and does not have to match the pitch of the roof. Further secure the retrofit stud by applying construction adhesive along the sheathing (wall of the gable end).

Glazed Openings

The following specifications apply to the 2007 Florida Building Code. Once the 2010 Florida Building Code becomes effective specifications will vary.

Shutters have to be installed or closed before the arrival of a storm. As this requires action on the part of the resident, a variety of products exists to address varying abilities and preferences of residents.

Glazed openings refers to any opening that has a glazed surface. This includes windows, glass doors and glass block. Panel shutters are the most common type of covering for glazed openings and are available in a wide variety of materials and mounting options.

Panel shutters are mounted either by tracks or by small metal posts. Either option is a permanent feature to your home. For many, the appearance of tracks or posts on the side of their home is not aesthetically pleasing. Most recognize it is a valuable safety feature for high wind prone areas.

For those bothered by the appearance of tracks or posts, another option for windows and glazed surfaces within doors is to buy windows and doors with impact-resistant glass. These are more expensive and are not shatter proof. Replacement of impact resistant glass can be expensive. Replacement of cracked surfaces is a necessity in securing your home for high-wind storms.

While having impact-resistant glass windows prevent the need to shutter before a storm, impact-resistant glass windows are heavier, may be difficult to open for daily use and enjoyment, and do not prevent debris from entering a home if fractured. So the recommended mitigation is to shutter your home. Panels come in steel, lightweight aluminum, plexi-glass and cloth. In addition, shutters can be permanent fixtures and have a traditional appearance (good for registered historical homes and structures), be accordion, or be automated and roll down and lock with the click of a button.

Water can intrude around shutters and cause damage to frames both inside and outside the home. Make sure you inspect all openings before and after a storm to ensure water has not penetrated the walls of the home. If water penetrates the home and is left untreated, mold and mildew will grow quickly.

The picture above shows tracks installed above and below the opening. Before a storm arrives, the resident will slide and secure the panels into the tracks. The tracks are permanent installations.

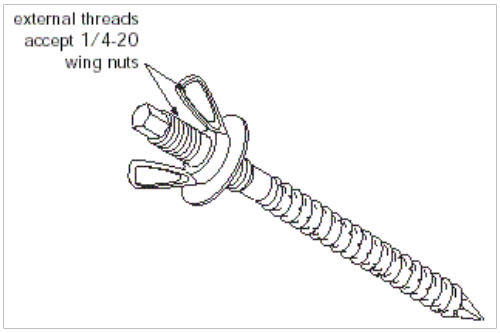

The pictures above shows the post installed around a window that will be used to anchor the panel shutter. These posts are permanent installations and shutters are fastened with a wing-nut.

A quick, effective and easy shutter is a plywood board. There are various clips and braces that can be added to hold plywood in place. Plywood is cheap and easy to customize the size to fit any window. While thick plywood is an effective shutter, insurance companies are not required to provide discounts for plywood shutters.

If you want to install shutters yourself, first consider what type of shutter you want to install, any obstacles or outcrops around windows (including window sills and window AC units) and local building code permits. In some Florida communities shutters require local building permits. This is required to ensure effective and proper installation.

The anchor used for securing shutters is largely dependent on the type of wall (wood or block) and the type of shutter to be installed. If installing shutters yourself, make sure you follow all installation recommendations issued by the manufacturer.

Before installing shutters, inspect the framing around the windows and doors to ensure the framing is in good condition. If necessary, replace or reinforce framing and apply weathering strips or caulk to create a good seal around the windows and doors.

In many cases even shuttering a window will not prevent water intrusion. Sealing the window and framing is as important as shuttering.

Areas around doorways that have decorative glass and/or glazed surfaces should be shuttered. The picture above demonstrates a decorative feature that required shuttering of the entire area. Even though the glazed area is small, the decorative features weaken the wall and its ability to withstand high winds.

To qualify for insurance savings, all windows and doors must be shuttered or replaced with wind rated equivalent. Insurance savings vary by company, location and your specific home. If you have multiple mitigation features, the percentages below cannot be combined to estimate an overall discount.

In general, anchoring your home includes the following savings:

Basic shutters - 35%

Hurricane rated shutters - 44%

Homes that are built after 2001: Basic shutters & Hurricane rated shutters - 6%

The following specifications apply to the 2007 Florida Building Code. Once the 2010 Florida Building Code becomes effective specifications will vary.

Doorways

For ease of accessibility, main doors should be replaced with hurricane rated doors. Garage doors should also be replaced. In some cases, existing garage doors can be braced.

Wind Resistant Doors

Wind resistant doors are generally heavy, solid doors. The most obvious feature of wind resistant doors is that it opens out. Wind resistant doors also have at least three and generally four mounting brackets with screws that are 2 1/2 to 3 inches long. This will ensure the door is connected to the door frame as well as the wall framing behind the door frame.

When replacing your door, ensure the framing is solid and if necessary replace and reinforce the framing. It is important to ensure the door is installed to manufacturer's specifications.

The hinges strengthen only one side of the door. On the other side is a bolt lock that should also be secure. The bolt lock should be 1" long to extend far enough into the frame to hold the door in a closed position.

Shuttering

French doors or double doors should be shuttered. French doors often fail at their connection point because the center beam is not designed to sustain the force of high winds.

When shuttering your home make sure you have multiple access points.

Garage doors should be shuttered, replaced with a wind rated door or in some cases can be reinforced by adding a bracing bar behind each panel. Using your car to brace your garage door will only result in your car being damaged with impact from the garage door. In addition, any glazed surface panels should be replaced with solid panels before the storm.

Wind rated garage doors are

generally solid doors with extra bracing. The added weight of a solid door requires reinforced tracks and a stronger garage door opener.

Often during a hurricane, power is lost for a period of time. If there is a major storm, power may be out for days. Make sure the garage door opener has a manual release. Also, given the added weight of a wind rated garage door, the garage door should not be your primary exit. It may be difficult to open the door after a storm.

The insurance savings for doorways are part of savings for shuttering and glazed surfaces.

Florida Statute: 627.711 Notice of premium discounts for hurricane loss mitigation; uniform mitigation verification inspection form.—

(1)Using a form prescribed by the Office of Insurance Regulation, the insurer shall clearly notify the applicant or policyholder of any personal lines residential property insurance policy, at the time of the issuance of the policy and at each renewal, of the availability and the range of each premium discount, credit, other rate differential, or reduction in deductibles, and combinations of discounts, credits, rate differentials, or reductions in deductibles, for properties on which fixtures or construction techniques demonstrated to reduce the amount of loss in a windstorm can be or have been installed or implemented. The prescribed form shall describe generally what actions the policyholders may be able to take to reduce their windstorm premium. The prescribed form and a list of such ranges approved by the office for each insurer licensed in the state and providing such discounts, credits, other rate differentials, or reductions in deductibles for properties described in this subsection shall be available for electronic viewing and download from the Department of Financial Services' or the Office of Insurance Regulation's Internet website. The Financial Services Commission may adopt rules to implement this subsection.

(2)(a)The Financial Services Commission shall develop by rule a uniform mitigation verification inspection form that shall be used by all insurers when submitted by policyholders for the purpose of factoring discounts for wind insurance. In developing the form, the commission shall seek input from insurance, construction, and building code representatives. Further, the commission shall provide guidance as to the length of time the inspection results are valid. An insurer shall accept as valid a uniform mitigation verification form signed by the following authorized mitigation inspectors:

1.A home inspector licensed under s. 468.8314 who has completed at least 3 hours of hurricane mitigation training approved by the Construction Industry Licensing Board which includes hurricane mitigation techniques and compliance with the uniform mitigation verification form and completion of a proficiency exam;

2.A building code inspector certified under s. 468.607;

3.A general, building, or residential contractor licensed under s. 489.111;

4.A professional engineer licensed under s. 471.015;

5.A professional architect licensed under s. 481.213; or

6.Any other individual or entity recognized by the insurer as possessing the necessary qualifications to properly complete a uniform mitigation verification form.

(b)An insurer may, but is not required to, accept a form from any other person possessing qualifications and experience acceptable to the insurer.

(3)A person who is authorized to sign a mitigation verification form must inspect the structures referenced by the form personally, not through employees or other persons, and must certify or attest to personal inspection of the structures referenced by the form. However, licensees under s. 471.015 or s. 489.111 may authorize a direct employee, who is not an independent contractor, and who possesses the requisite skill, knowledge and experience, to conduct a mitigation verification inspection. Insurers shall have the right to request and obtain information from the authorized mitigation inspector under s. 471.015 or s. 489.111, regarding any authorized employee's qualifications prior to accepting a mitigation verification form performed by an employee that is not licensed under s. 471.015 or s. 489.111.

(4)An authorized mitigation inspector that signs a uniform mitigation form, and a direct employee authorized to conduct mitigation verification inspections under paragraph (3), may not commit misconduct in performing hurricane mitigation inspections or in completing a uniform mitigation form that causes financial harm to a customer or their insurer; or that jeopardizes a customer's health and safety. Misconduct occurs when an authorized mitigation inspector signs a uniform mitigation verification form that:

(a)Falsely indicates that he or she personally inspected the structures referenced by the form;

(b)Falsely indicates the existence of a feature which entitles an insured to a mitigation discount which the inspector knows does not exist or did not personally inspect;

(c)Contains erroneous information due to the gross negligence of the inspector; or

(d)Contains a pattern of demonstrably false information regarding the existence of mitigation features that could give an insured a false evaluation of the ability of the structure to withstand major damage from a hurricane endangering the safety of the insured's life and property.

Notice of Premium Discounts for Hurricane Loss Mitigation

*** Important Information ***
About Your Personal Residential Insurance Policy

Dear Homeowner,

Hurricanes have caused tens of billions of dollars in insured damages and predictions of more catastrophic hurricanes making landfall in Florida have triggered increases in insurance premiums to cover potential future losses. Enclosed is information regarding wind loss mitigation that will make your home more resistant to wind and help protect your family during a catastrophic event. In addition to reducing your hurricane wind premium by installing mitigation features, you may also reduce the likelihood of out of pocket expenses, such as your hurricane deductible, you may otherwise incur after a catastrophic event.

What factors are considered in establishing my premium?

Your location: The closer you are to the coast, the more vulnerable you are to damage caused by hurricane winds and this makes your hurricane-wind premium higher than similar homes in other areas of the state.

Your policy: Your insurance policy is divided into two premiums: one for damage caused by hurricane force winds (hurricane-wind) and one for all other damage (all perils), such as fire.

Your deductible: Under the law, you are allowed to choose a $500, 2%, 5% or 10% deductible depending on the actual value of your home. The larger your deductible, the lower your hurricane-wind premium, however, if you select a higher deductible your out-of-pocket expenses in the event of a hurricane claim will be higher.

Improvements to your home: The state requires insurance companies to offer discounts for protecting your home against damage caused by hurricane winds. Securing your roof so it doesn't blow off and protecting your windows from flying debris are the two most cost effective measures you can take to safeguard your home and reduce your hurricane –wind premium. These discounts apply only to the hurricane-wind portion of your policy.

The costs of the improvement projects vary. Homeowners should contact a licensed contractor for an estimate. You can find a Certified Contractor in your area by visiting the Florida Department of Business and Professional Regulation online at www.myfloridalicense.com.

Your maximum discount: Discounts are not calculated cumulatively. The total discount is not the sum of the individual discounts. Instead, when one discount is applied, other discounts are reduced until you reach your maximum discount of 88%.

OIR-B1-1655 (02/10)
FL HO0002 0410

1

How can I take advantage of the discounts?

Homeowners will need a qualified inspector such as a general, building, or residential contractor licensed under Section 489.111, Florida Statutes, or a professional engineer licensed under Section 471.015, Florida Statutes, who has passed the appropriate equivalency test of the Building Code training program as required by Section 553.841, Florida Statutes, or a professional architect licensed under Section 481.213, Florida Statutes, or a building code inspector certified under Section 468.607, to inspect the home to identify potential mitigation measures and verify improvements. For a listing of individuals and/or inspection companies meeting these qualifications contact your insurance agent or insurance company.

Description of Feature	Estimated* Premium Discount Percent	Estimated* Annual Premium ($) is **Reduced** by:
Roof Covering (i.e., shingles or tiles)		
• Meets the Florida Building Code	11%	
• Reinforced Concrete Roof Deck (If this feature is installed on your home you most likely will not qualify for any other discount.)	82%	

OIR-B1-1655 (02/10)
FL HO0002 0410

Description of Feature	Estimated* Premium Discount Percent	Estimated* Annual Premium ($) is **Reduced** by:
Roof-to-Wall Connection		
• Using "Toe Nails" – defined as 3 nails are driven at an angle through the rafter and into the top roof.	0%	
• Using Clips - defined as pieces of metal that are nailed into the side of the rafter/truss and into the side of the top plate or wall stud	35%	
• Using Single Wraps – a single strap that is attached to the side and/or bottom of the top plate and are nailed to the rafter/truss	35%	
• Using Double Wraps - straps are attached to the side and/or bottom of the top plate and are nailed to the rafter/truss	35%	
Roof Shape		
• Hip Roof – defined as your roof sloping down to meet all your outside walls (like a pyramid).	47%	
• Other	0%	
Secondary Water Resistance (SWR)		
• SWR – defined as a layer of protection between the shingles and the plywood underneath that protects the building if the shingles blow off.	6%	
• No SWR	0%	
Shutters		
• None	0%	
• Intermediate Type —shutters that are strong enough to meet half the old Miami-Dade building code standards	35%	
• Hurricane Protection Type -- shutters that are strong enough to meet the current Miami-Dade building code standards	44%	

OIR-B1-1655 (02/10)
FL HO0002 0410

Homes built under the 2001 building code and later

Description of Feature	Estimated* Premium Discount Percent	Estimated* Annual Premium ($) is **Reduced** by:
Homes built under the 2001 Florida Building Code or later edition (also including the 1994 South Florida Building Code for homes in Miami-Dade and Broward Counties) are eligible for a minimum 68% discount on the hurricane-wind portion of your premium. You may be eligible for greater discounts if other mitigation features are installed on your home.	68%	
Shutters		
• None	0%	
• Intermediate Type —shutters that are strong enough to meet half the old Miami-Dade building code standards	6%	
• Hurricane Protection Type -- shutters that are strong enough to meet the current Miami-Dade building code standards	6%	

OIR-B1-1655 (02/10)
FL HO0002 0410

Local Disaster Related Organizations

National disaster response organizations, local community response organizations, faith-based organizations and long-term recovery organizations all play a significant role in recovering from a disaster.

Florida knows the value of volunteers!
Support your local disaster organizations...they'll be there when you need them.

Important Message from Florida's Foundation...

Our mission is to strengthen Florida by making positive changes in the lives of Florida's families through initiatives, like disaster mitigation. In our daily role of providing administrative oversight of Florida's Disaster Fund we are directly invested in ensuring Florida's citizens, particularly those whose homes are their primary asset, are able to withstand a disaster and return safely to their pre-disaster lives.

It is this goal that we developed this program to inform you, Florida's homeowners, of the multiple resources available to assist in fortifying your home. We hope you find this manual useful and informative.

As Floridians, we all live one-half of the year (June 1 - November 30) in hurricane season. Together we can build smarter and minimize the devastation of mother nature.

Special Thanks to....

Florida Division of Emergency Management, Florida's Disaster Fund, Insurance Institute for Business and Home Safety, Blueprint for Safety, Federal Alliance for Safe Homes, Federal Emergency Management Agency, Florida Building Commission and the Florida Interfaith/Inter-Agencies Networking in Disaster for pictures and technical guidance.

Florida's Foundation

Kay.Kammel@FloridasFoundation.org

Kay Kammel, President
820 East Park Avenue
Building E, Suite 100
Tallahassee, FL 32301
800.825.3786

Preparedness Checklist

❍ Get A Plan!

www.FloridaDisaster.org

❍ Have current information

www.FloridaEvacuates.com

❍ Supply kit, including food, water, clothing (for all types of conditions), and toiletries

❍ First aid supplies, disinfectant and medications

❍ Radios, flashlights, air-horn

❍ Garbage bags and waterproof containers for storage

❍ Dust mask and other tools

❍ Toys, books and games

❍ Important documents, including insurance, medical records, bank account and social security information

❍ Contact information of family and friends

❍ Specific items needed for your family including items for infants, elderly and disabled

❍ Vehicle tanks filled with fuel

❍ Let others know your disaster plans, especially those out of state and out of immediate disaster area

❍ Keep driveway accessible with overhead clearance for emergency vehicles

❍ Obtain a NOAA weather radio and check often to make sure it is still working, replace batteries

❍ Home clearly labeled with number for emergency crews

❍ If there are special needs, including medical (insulin, oxygen) make sure you are on the county's special needs listing before a disaster warning

❍ Stay informed and heed warnings from local and state government officials

❍ If you want to help volunteer for recovery, sign up before a disaster warning, get trained and be ready to assist when called - do not just show up on at a disaster response site.

Disaster Specific Items

❍ Wind: Anchor lawn items, including furniture, grills and potted plants by bringing indoors or sinking in swimming pool

❍ Wind: Remove gravel and replace with mulch

❍ Wind: Put up hurricane shutters and gable/soffit vent covers

❍ Fire: Extinguishers in house and easy to access

❍ Fire: Smoke alarms working

❍ Fire: Areas kept free of clutter and debris, including pruning limbs and clearing underbrush

❍ Fire: Trim hedges and tree limbs away from house

❍ Fire: Plant only low-flammability plants near home

❍ Flood: Elevate air conditioning unit and other major appliances

❍ Flood: Clear all drains

❍ Flood: Installed back-flow valves on primary drains

❍ Earthquake: Anchor bookcases, file cabinets, mirrors and fuel tanks.

Florida Division of Emergency Management

2555 Shumard Oak Boulevard

Tallahassee, FL 32399-2100

Florida's Foundation

Kay.Kammel@FloridasFoundation.org

Kay Kammel, President
820 East Park Avenue
Building E, Suite 100
Tallahassee, FL 32301
800.825.3786